WEBDYN

Appendix for Fronius inverters

WebdynSun

The monitoring gateway for your solar installation

CONTENTS

1 Connecting the gateway to Fronius inverters via the RS485(A) communications bus 3
1.1 Detailed description of Type 1 inverter installation..... 5
1.2 Detailed description of Type 2 inverter installation..... 5
1.3 Connecting at the end of the bus 7
1.4 Connecting in the middle of the bus..... 9
2 Discovering the Fronius inverter network and the DAQ.ini file 11
3 Definition file for Fronius inverter families 12
4 Status variable 13
5 Correspondence table for inverter families 14
6 Fronius inverter parameter files 17
7 Fronius inverter alarm files..... 17
8 Fronius inverter command files..... 18

1 Connecting the gateway to Fronius inverters via the RS485(A) communications bus

This chapter describes the connection of the WebdynSun to the RS485 bus that communicates with the inverters.

The gateway can handle a maximum of 100 Fronius inverters.

The WebdynSun gateway is capable of managing **all** the inverters in the Fronius range. However, it is a good idea to distinguish two types of installation, depending on the inverters used.

- **Type 1** for inverters:
  - Fronius IG-TL
  - Fronius IG Plus (*)
  - Fronius CL

- **Type 2** for IG inverters (IG15, IG20, IG30, IG40, IG60, IG300, IG400, IG500, IG2000, IG3000, IG4000, IG5100 etc.)

Except for the Fronius IG TL inverter, which already contains a communications interface, all the inverter models require the addition of a Com Card (see reference below) to each inverter to allow installation in a network.

Designation	Reference
Com Card	4,240,001

The inverters are linked together by means of Ethernet cables. The Com Cards are fitted with RJ45 sockets for this purpose.
Connection to the WebdynSun gateway is therefore made by baring the end of an Ethernet cable. The pins of the serial interface to the 8-pole RJ45 socket are attributed as follows:

Pin	Signal	Description	WebdynSun connection
1 and 8	Power	The Com Card provides a power supply tension: 10 – 12 V DC / 300 mA	Not connected
2 and 7	Earth		Pin 17
3	RxD+	RS-422 reception line positive	Tx+ Pin 15
4	TxD+	RS-422 transmission line positive	Rx+ Pin 13
5	TxD-	RS-422 transmission line negative	Rx- Pin 14
6	RxD-	RS-422 reception line negative	Tx- Pin 16

Colour coding is not standardised on Ethernet cables. If there is any doubt, check the continuity between each pin of the RJ45 plug and the corresponding bared cable using a multi-meter.

To ensure correct operation of the RS485 data bus, it must be fitted with a termination plug at both ends.

On the last inverter, this termination is provided by using the “connector plug” whose pinout is described below.

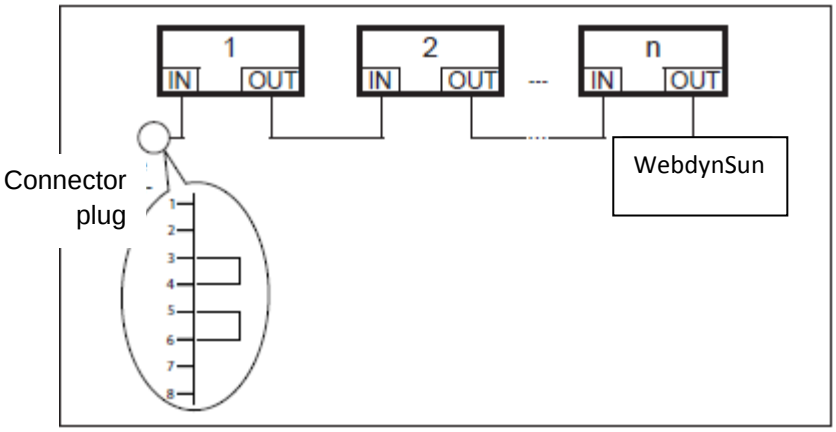

Description of the terminator:

Pins TxD+(4) and RxD+(3) are connected together, as are Pins TxD-(5) and RxD-(6).

At the WebdynSun end:

The gateway may be connected at the end of the RS485 communications bus or in the middle of the bus. Depending on the position of the gateway on the bus, this terminator plug must be enabled or disabled via a set of two jumpers inside the casing. (See details at the end of this chapter.)

(*) The interface protocol can only be read from the control printed circuit using software version 4.22.00 (USA: 4.15.00) or greater.

All wiring must be carried out only by a specialised qualified electrician.
Prior to installation, all equipment connected to the corresponding communications bus must be disconnected on both sides (DC and AC).
Respect all safety recommendations appearing in inverter documentation.

1.1 Detailed description of Type 1 inverter installation

Example of Type 1 installation

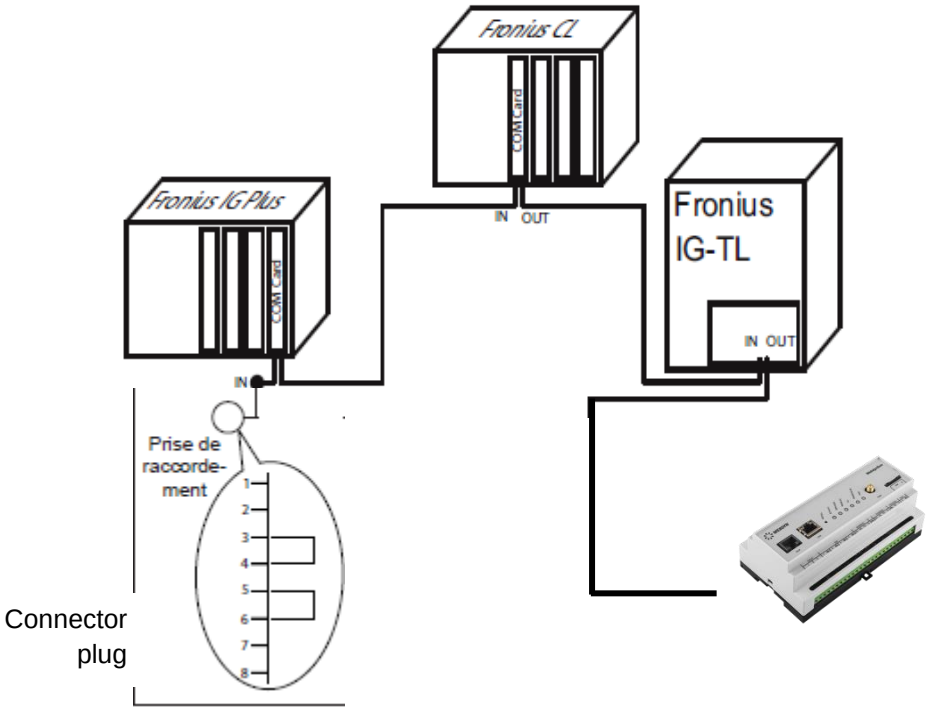

The inverters must be configured using the IFP configuration protocol with a bus speed of 19200 baud, and must possess a unique IG-NR address.

	To properly configure the inverter, refer to the manufacturer's documentation.

1.2 Detailed description of Type 2 inverter installation

Inverters of the Fronius IG type do not provide direct communication via the RS485 network. Their data are available with the help of a data logger and an interface card, which provides the data via an RS232 link.
The RS232 signal must therefore be converted into an RS485 signal to communicate with the WebdynSun gateway (see diagram below).

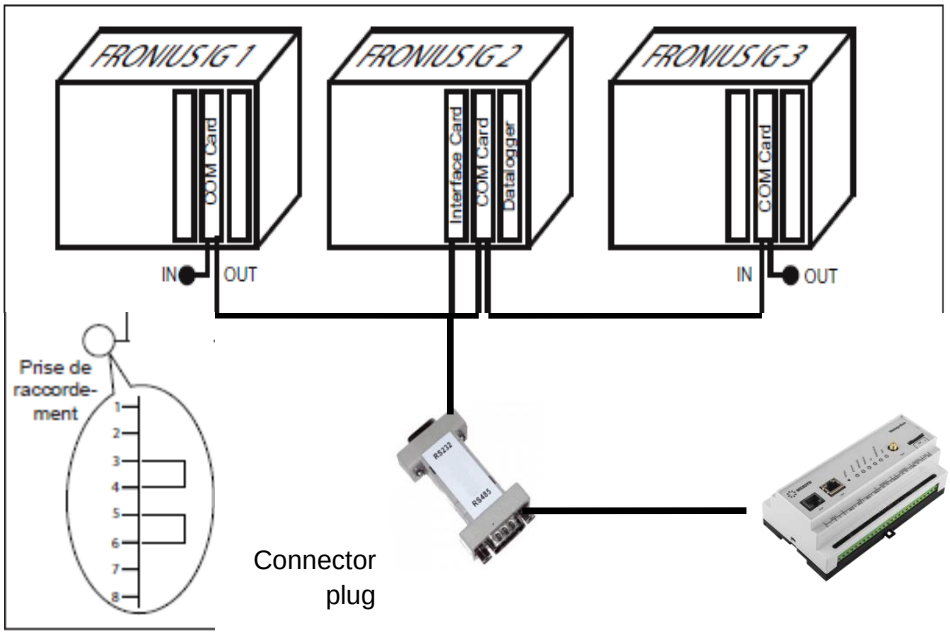

List of components necessary, in addition to the RS232/RS485 converter:

- An “Interface Card” or “Interface Box”:

Interface Card	4,240,009
Interface Box	4,240,109

- And a “Datalogger Card” or “Datalogger Box”:

Datalogger Card	4,240,002
Datalogger Box	4,240,102

The combination can be replaced by a “Datalogger & Interface”:

Datalogger & Interface	4,240,105

The Interface Card must be configured with a transfer rate of 19200 baud. Particular attention must also be paid to the configuration of the RS232/RS485 converter.

1.3 Connecting at the end of the bus

Positions of the JMP2 and JMP3 jumpers:
The two jumpers JMP2 and JMP3 inside the casing must be positioned to activate the 120 ohm bus terminator plug.

> By default, the gateway is configured for placement at the end of the bus.
> The jumpers are therefore set in the “Activation” position of the 120 ohm plug.

Hardware version 1:

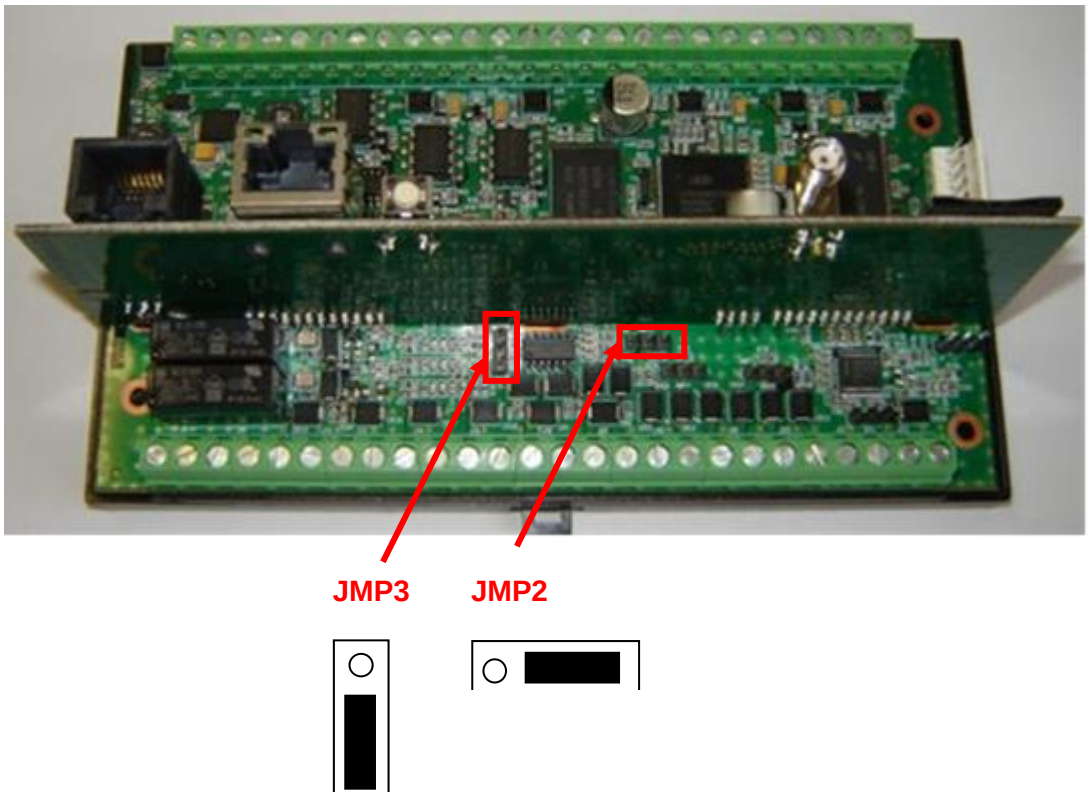

Hardware version 2:

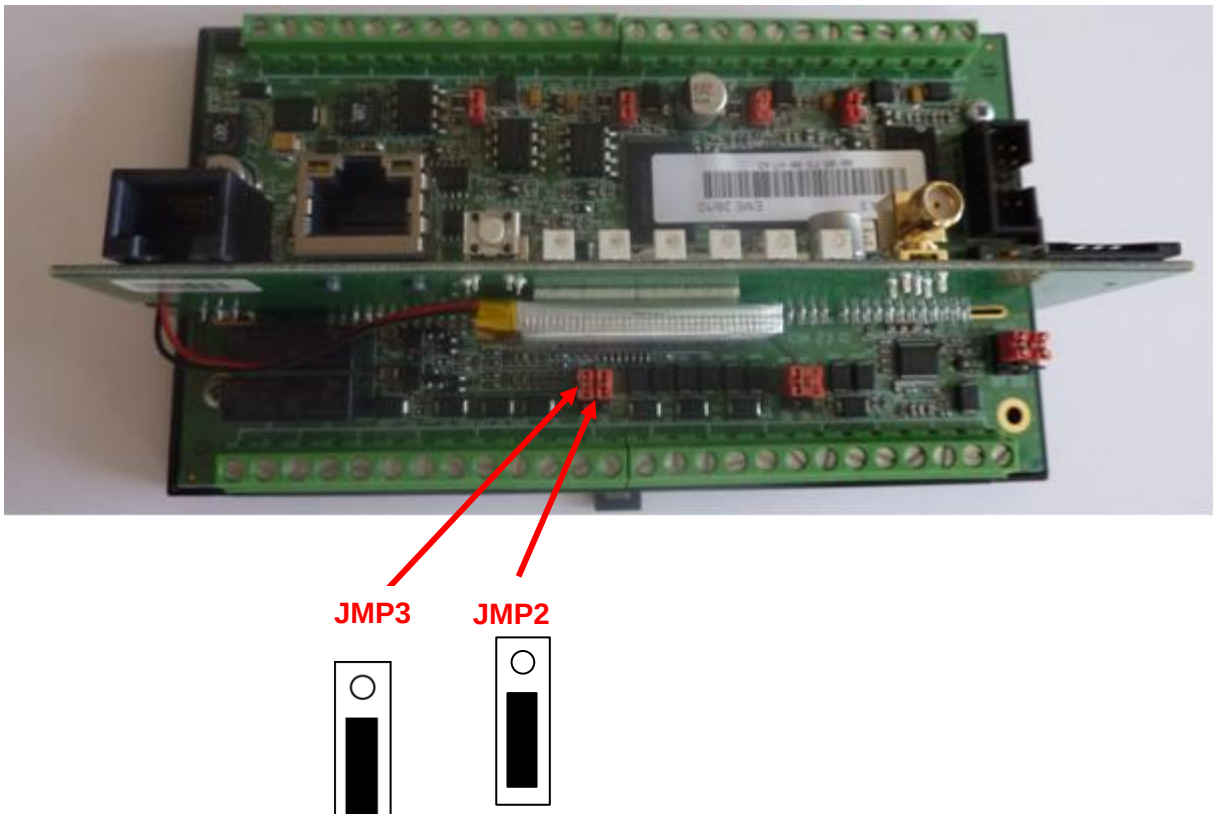

Connecting inverters to the RS485 bus:
Consult the inverter documentation regarding the principles governing RS485 connection and wiring. Some indications are given at the beginning of this chapter.

Once the RS485 cable has been brought up to the gateway:
1. Strip around 4 cm of the outer sheath from the RS485 communications cable.
2. Trim the shielding back to match the cable sheath.
3. Bare around 6 mm of the wires.
4. Connect the conductors to the connector marked RS485(A), respecting the allocations in your RS485 communications bus.

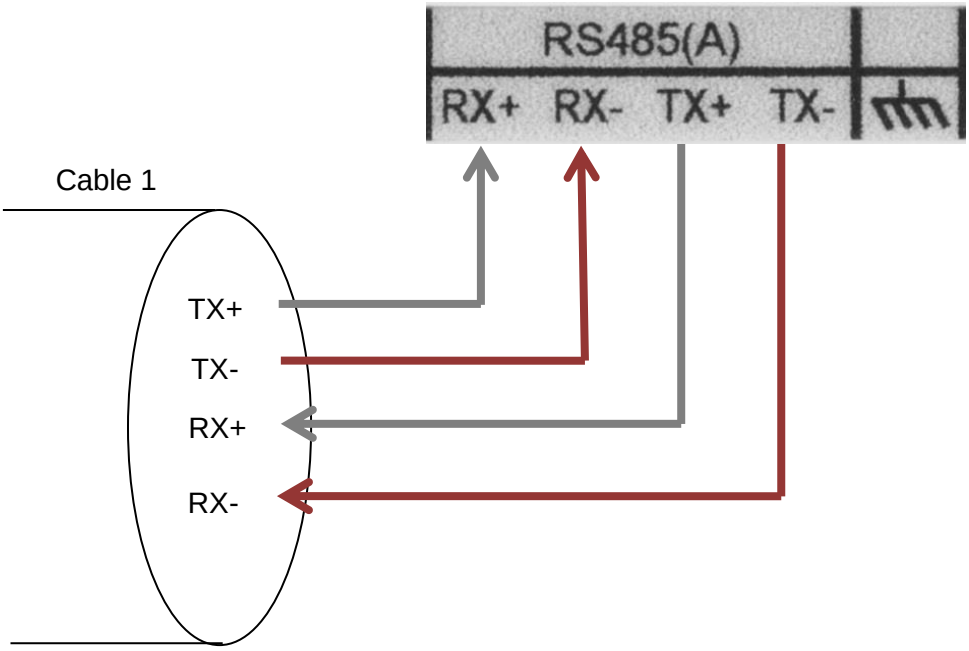

1.4 Connecting in the middle of the bus

Positions of the JMP2 and JMP3 jumpers:
Both the JMP2 and the JMP3 jumpers inside the casing must be positioned so as to deactivate the 120 ohm bus terminator plug.

Hardware version 1:

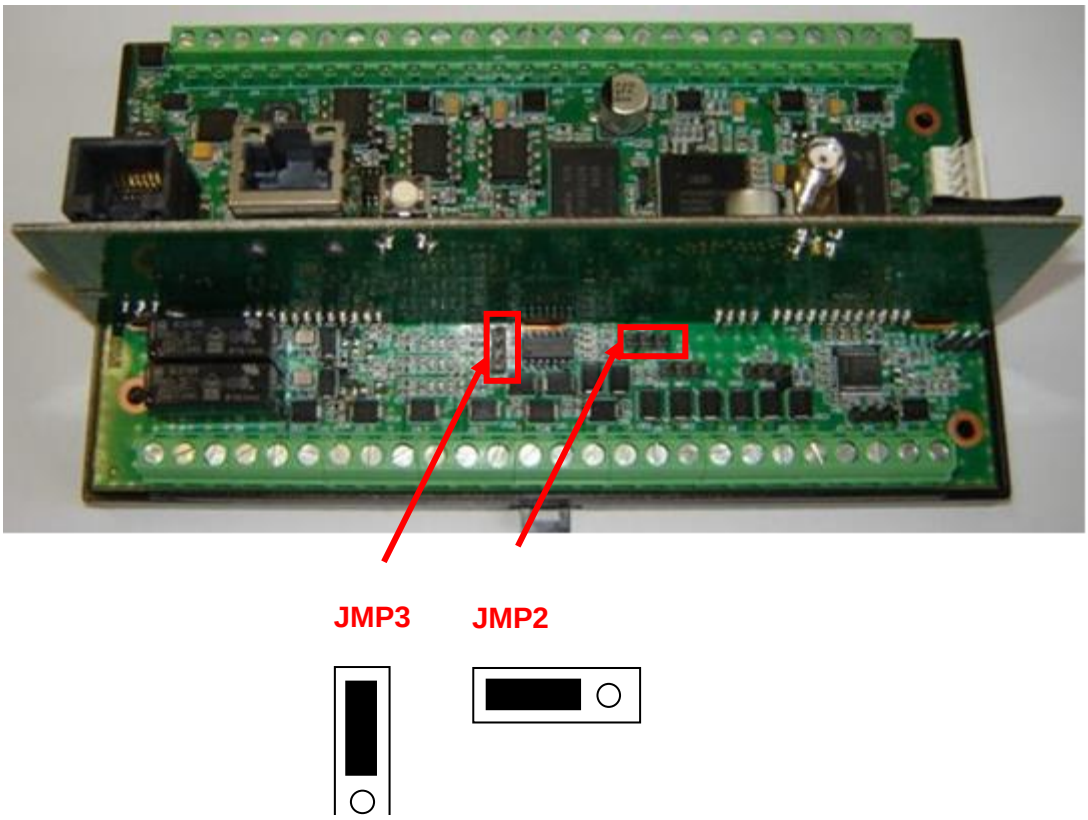

Hardware version 2:

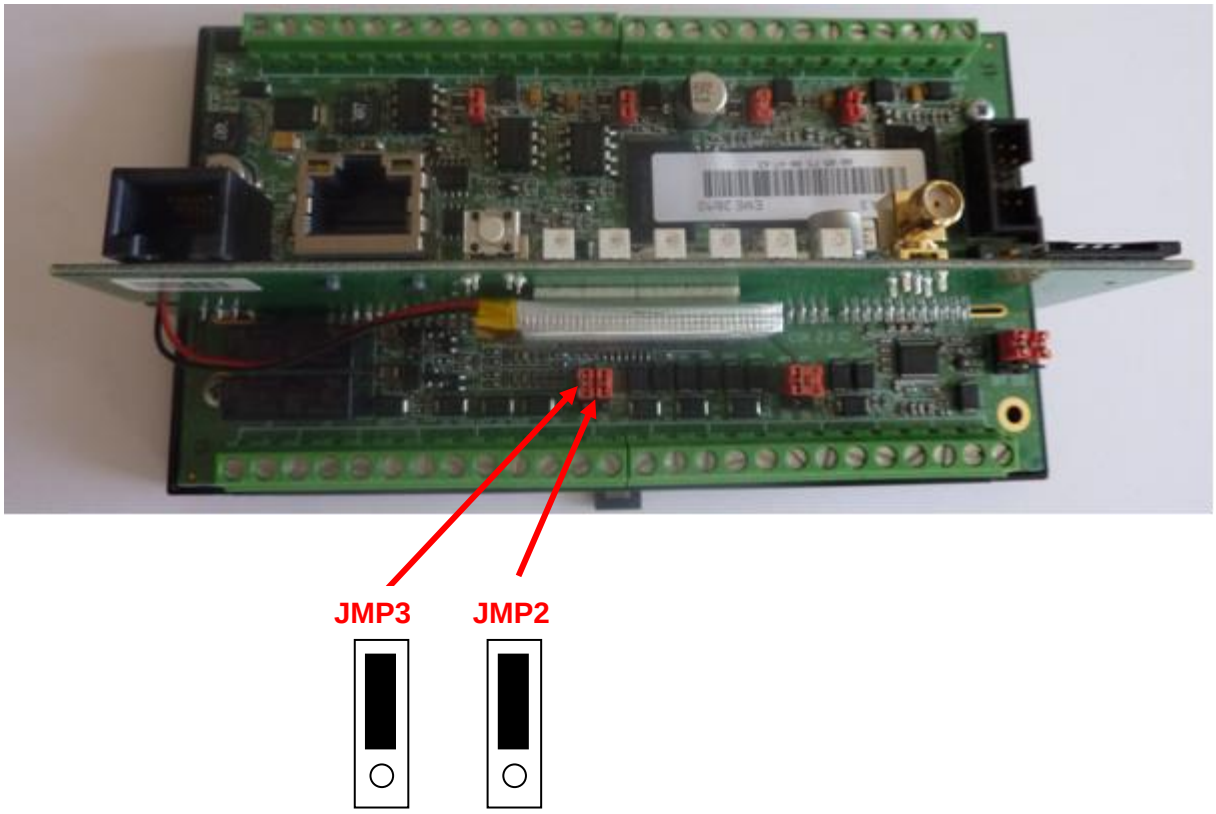

Connecting inverters to the RS485 bus:
Consult the inverter documentation regarding the principles governing RS485 connection and wiring.
Once the RS485 cable has been brought up to the gateway:

1. Strip around 4 cm of the outer sheath from the RS485 communications cable.
2. Trim the shielding back to match the cable sheath.
3. Bare around 6 mm of the wires.
4. Connect the conductors to the connector marked RS485(A), respecting the allocations in your RS485 communications bus.

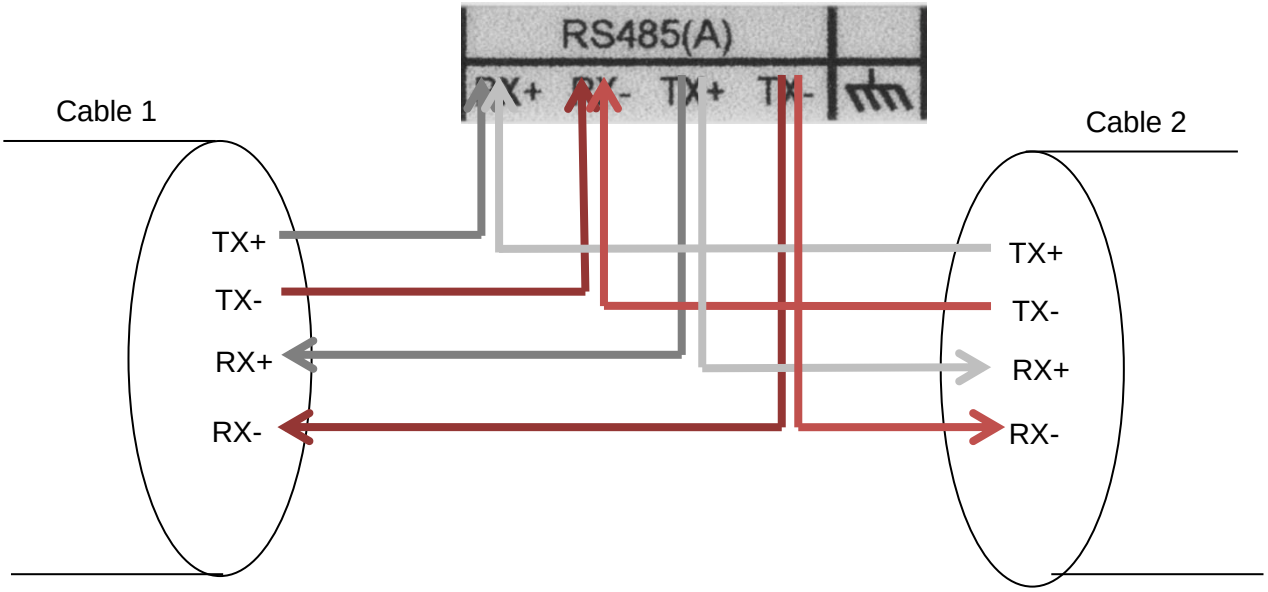

2 Discovering the Fronius inverter network and the DAQ.ini file

The Fronius protocol enables discovery of inverters, which have been manually addressed beforehand.

This discovery can be performed either via HTML pages or using a command file.

The serial numbers of Fronius devices are not always available, so the inverters are named in the file daq.ini: FRO_addr as shown in the following example:

```
INV_SN[0]=Fro_01
INV_FileDefName[0]=IDSite_INV_f4.ini
INV_SN[1]=Fro_02
INV_FileDefName[1]=IDSite_INV_f4.ini
```

Following this discovery, if a connection is initiated and there is no *IDSite*_daq.ini file present in the /CONFIG directory of the FTP server, an *IDsite*_daq.ini file containing the declarations for all the inverters discovered will be generated automatically, then uploaded to the server.

A definition file is created during the discovery phase, and is used to provide the information for the automatically generated *IDsite*_daq.ini file.
The definition files are also uploaded during the connection if they are not already present.

The definition file for the Fronius protocol is generic, and contains the whole set of data available as provided by the protocol. It is therefore a good idea to adapt it to suit the inverters in use.

> The unavailable data fields will appear in the data file, with the value "na" (non-available).

3 Definition file for Fronius inverter families

Filename format:
*IDSite*_INV_*Family*.ini

This file is uploaded by the gateway after an inverter discovery phase. It can be modified by the user.
IDSite: site identification number.
Family: family of the inverter (a hexadecimal code).

Example:

```
1;1;;;Version;-;1;0;1                                software option
2;2;;;DeviceType;-;1;0;1                             device or option
3;3;;;Time;-;1;0;1                                   IG-TL only
4;190;;;DeviceVersion;-;1;0;1                        hardware/software version of device
5;191;;;DeviceID;-;1;0;1                             device number (unid) / SN
6;55;;;InverterStatus;-;1;0;8                        Alarms
7;54;;;EnergyTotalex;Wh;1;0;4
8;16;;;Power-Now;W;1;0;4
9;17;;;Energy-Total;Wh;1;0;4
10;18;;;Energy-Day;Wh;1;0;4
11;19;;;Energy-Year;Wh;1;0;4
12;20;;;Iac;A;1;0;4
13;21;;;Vac;V;1;0;4
14;22;;;Fac;Hz;1;0;4
15;23;;;Idc;A;1;0;4
16;24;;;Vdc;V;1;0;4
17;25;;;yield-day;-;1;0;4
18;26;;;MaxPower-Day;W;1;0;4
19;27;;;MaxVac-Day;V;1;0;4
20;28;;;MinVac-Day;V;1;0;4
21;29;;;MaxVdc-Day;V;1;0;4
22;30;;;OperatingHours-Day;Minutes;1;0;4
23;37;;;yield-Total;-;1;0;4
24;38;;;MaxPower-Total;W;1;0;4
25;39;;;MaxVac-Total;V;1;0;4                         daily gain
```

```
26;40;;;MinVac-Total;V;1;0;4
27;41;;;MaxVdc-Total;V;1;0;4
28;42;;;OperatingHours-Total;minutes;1;0;4
IG-TL only
29;31;;;yield-Year;-;1;0;4
30;32;;;MaxPower-Year;W;1;0;4
31;33;;;MaxVac-Year;V;1;0;4                    annual gain
32;34;;;MinVac-Year;V;1;0;4
33;35;;;MaxVdc-Year;V;1;0;4
34;36;;;OperatingHours-Year;minutes;1;0;4
IG Plus / CL (multiphase) only
35;43;;;Iphase1;A;1;0;4
36;44;;;Iphase2;A;1;0;4
37;45;;;Iphase3;A;1;0;4
38;46;;;Vphase1;V;1;0;4
39;48;;;Vphase3;V;1;0;4
Central / CL only
40;49;;;AmbientTemperature;°C;1;0;4
41;50;;;FanRotationSpeed;rpm;1;0;4
42;51;;;FanRotationSpeed;rpm;1;0;4
43;52;;;FanRotationSpeed;rpm;1;0;4
```

This file lists the full set of channels on the inverter, in the format:
Index;Command;Arg1;Arg2;Name;Units;A;B;**Action**

An understanding of the fields Command, Arg1 and Arg2 is not required for operation of the WebdynSun. These fields enable the gateway to retrieve the variable from information given by the Fronius protocol.
These are the only fields that must under no circumstances be modified.

The action to be applied to each variable is specified at the end of the line:

- ***Action=0***: Variable not collected.
- ***Action=1***: Variable treated as read-only parameter.
- ***Action=2***: Min/max/avg values.
- ***Action=4***: Instantaneous value.
- ***Action=8***: Variable treated as an alarm.

N.B. if the action defined is not consistent with the variable type, it is ignored.

4 Status variable

The possible codes for the status variable, InverterStatus, are:

Value	Meaning	Explanation
0x01	Startup	The inverter is in its startup phase
0x02	Operation	The inverter is in current injection mode
0x03	Manual Standby	A user action has placed the inverter in Standby mode
0x04	Failure	The inverter is processing an error

5 Correspondence table for inverter families

The hexadecimal code describing the inverter family is that used in naming the definition file (see chapter 3).

Glossary for inverter definitions:

Onduleur monophasé —> Single-phase inverter
Onduleur Dummy —> Dummy inverter
Onduleur triphasé —> Three-phase inverter
Onduleur biphasé —> Two-phase inverter
Composants DATCOM —> DATCOM components
Appareil ou option inconnu(e), appareil ou option inactive —> Unknown device or option, inactive device or option

Identification byte	Device/Option	Type
0xFE	FRONIUS IG 15	Onduleur monophasé
0xFD	FRONIUS IG 20	Onduleur monophasé
0xFC	FRONIUS IG 30	Onduleur monophasé
0xFB	FRONIUS IG 30 Dummy	Onduleur Dummy
0xFA	FRONIUS IG 40	Onduleur monophasé
0xF9	FRONIUS IG 60 / IG 60 HV	Onduleur monophasé
0xF6	FRONIUS IG 300	Onduleur triphasé
0xF5	FRONIUS IG 400	Onduleur triphasé
0xF4	FRONIUS IG 500	Onduleur triphasé
0xF3	FRONIUS IG 60 / IG 60 HV	Onduleur monophasé
0xEE	FRONIUS IG 2000	Onduleur monophasé
0xED	FRONIUS IG 3000	Onduleur monophasé
0xEB	FRONIUS IG 4000	Onduleur monophasé
0xEA	FRONIUS IG 5100	Onduleur monophasé
0xE5	FRONIUS IG 2500-LV	Onduleur monophasé
0xE3	FRONIUS IG 4500-LV	Onduleur monophasé
0xDF	Fronius IG Plus 11.4-3 Delta	Onduleur triphasé
0xDE	Fronius IG Plus 11.4-1 UNI	Onduleur monophasé
0xDD	Fronius IG Plus 10.0-1 UNI	Onduleur monophasé
0xDC	Fronius IG Plus 7.5-1 UNI	Onduleur monophasé
0xDB	Fronius IG Plus 6.0-1 UNI	Onduleur monophasé
0xDA	Fronius IG Plus 5.0-1 UNI	Onduleur monophasé
0xD9	Fronius IG Plus 3.8-1 UNI	Onduleur monophasé
0xD8	Fronius IG Plus 3.0-1 UNI	Onduleur monophasé
0xD7	Fronius IG Plus 120-3	Onduleur triphasé
0xD6	Fronius IG Plus 70-2	Onduleur biphasé
0xD5	Fronius IG Plus 70-1	Onduleur monophasé
0xD4	Fronius IG Plus 35-1	Onduleur monophasé
0xD3	Fronius IG Plus 150-3	Onduleur triphasé
0xD2	Fronius IG Plus 100-2	Onduleur biphasé
0xD1	Fronius IG Plus 100-1	Onduleur monophasé
0xD0	Fronius IG Plus 50-1	Onduleur monophasé
0xCF	Fronius IG Plus 12.0-3 WYE277	Onduleur triphasé
0xC1	Fronius IG-TL 3.6	Onduleur monophasé
0xC0	Fronius IG-TL 5.0	Onduleur monophasé
0xBF	Fronius IG-TL 4.0	Onduleur monophasé
0xBE	Fronius IG-TL 3.0	Onduleur monophasé
0xFE	Sensor Card Sensor Box	Composants DATCOM
0xFF	Appareil ou option inconnu(e), appareil ou option inactive	

Octet Identification byte	Appareil / Option Device/Option	Type Type
		Onduleur monophasé
0xB0	Fronius IG Plus 50V-1	Onduleur monophasé
0xAF	Fronius IG Plus 70V-1	Onduleur monophasé
0xAE	Fronius IG Plus 70V-2	Onduleur biphasé
0xAD	Fronius IG Plus 100V-1	Onduleur monophasé
0xAC	Fronius IG Plus 100V-2	Onduleur biphasé
0xAB	Fronius IG Plus 120V-3	Onduleur triphasé
0xAA	Fronius IG Plus 150V-3	Onduleur triphasé
0xA9	Fronius IG Plus V 3.0-1 UNI	Onduleur monophasé
0xA8	Fronius IG Plus V 3.8-1 UNI	Onduleur monophasé
0xA7	Fronius IG Plus V 5.0-1 UNI	Onduleur monophasé
0xA6	Fronius IG Plus V 6.0-1 UNI	Onduleur monophasé
0xA5	Fronius IG Plus V 7.5-1 UNI	Onduleur monophasé
0xA4	Fronius IG Plus V 10.0-1 UNI	Onduleur monophasé
0xA3	Fronius IG Plus V 11.4-1 UNI	Onduleur monophasé
0xA2	Fronius IG Plus V 11.4-3 DELTA	Onduleur triphasé
0xA1	Fronius IG Plus V 12.0-3 WYE	Onduleur triphasé
0xA0	Fronius IG Plus 50V-1 Dummy	Onduleur Dummy
0x9F	Fronius IG Plus 100V-2 Dummy	Onduleur Dummy
0x9E	Fronius IG Plus 150V-3 Dummy	Onduleur Dummy
0x9D	Fronius IG Plus V 3.8-1 Dummy	Onduleur Dummy
0x9C	Fronius IG Plus V 7.5-1 Dummy	Onduleur Dummy
0x9B	Fronius IG Plus V 12.0-3 Dummy	Onduleur Dummy
0xBC	Fronius CL 36.0	Onduleur triphasé
0xBD	Fronius CL 48.0	Onduleur triphasé
0xC9	Fronius CL 60.0	Onduleur triphasé
0xB9	Fronius CL 36.0 WYE277	Onduleur triphasé
0xBA	Fronius CL 48.0 WYE277	Onduleur triphasé
0xBB	Fronius CL 60.0 WYE277	Onduleur triphasé
0xB6	Fronius CL 33.3 Delta	Onduleur triphasé
0xB7	Fronius CL 44.4 Delta	Onduleur triphasé
0xB8	Fronius CL 55.5 Delta	Onduleur triphasé
0x9A	Fronius CL 60.0 Dummy	Onduleur Dummy
0x99	Fronius CL 55.5 Delta Dummy	Onduleur Dummy
0x98	Fronius CL 60.0 WYE277 Dummy	Onduleur Dummy
0xFE	Sensor Card Sensor Box	Composants DATCOM
0xFF	Appareil ou option inconnu(e), appareil ou option inactive	

6 Fronius inverter parameter files

Filename format:
*IDSite*_INV_P_*YYMMDD_hhmmss*.csv.gz
Where:
IDSite: gateway identifier.

The parameters of the inverters present on the network are sent to the FTP server in two cases:

- During the installation phase triggered by pressing the push-button on the gateway;
- Via a command file of the type GATEWAY: Send inverter parameters (*see* chapter *12 Command files,* in the User's Manual).

The file format is as follows: (fields in green are optional data that can be enabled or disabled in *IDSite*_daq.ini (*see* section *7.3. Declaring and configuring inverters* in the User's Manual)).

```
SNINV;23252320000;1;
TypeINV;FRO_INV_b0.ini;
 4;1;2;5;6;
23/06/11-11:50:20;4.1.0.0.5.2.12.0;b0;IG-BRAIN|1.4D|5.02.12 IGP-DISP|1.3C|1.04.05
PINCI|2.2A|3.03.00;23252320000;
```

For each inverter, this file details the variables defined as parameters in the file *IDSite*_INV_*family*.ini *(see chapter 2 on the definition files for Fronius inverter families)*.

SNINV = Serial number of inverter n (n=0 to 99).
TypeINV = Family of inverter n.

The column heading ";1;2;3;4;5;…;" is added if the option DAQ_HeaderOption is enabled in *IDSite*_daq.ini (*see* section *7.3. Declaring and configuring inverters* in the User's Manual).

To minimise the sizes of transmitted files, the parameter file is compressed in .gz format

7 Fronius inverter alarm files

An alarm is generated, then transmitted to the remote server in the form of a file on the FTP server (*IDSite_AL_YYMMDD_hhmmss.csv.gz*).
The data stored is also uploaded at the same time as an alarm.

N.B. see chapter 4 Status variables, for the correspondence to alarm codes.

Alarm of the Fronius type:

This type of alarm is uploaded on a change in the status of a variable defined as an alarm in the associated definition file.

Date - Time	Type	Field1	Field2	Field3	Field4

Where:

Date–Time	Timestamp when alarm triggered, in format YY/MM/DD-hh:mm:ss
Type	INV: Alarm type is Fronius
Field1	*IDsite*_INV_*family*.ini: Name of reference definition file
Field2	Serial number of the triggering Fronius inverter
Field3	1 to N: Index of the triggering data item in the associated definition file.
Field4	Status of the trigger item: 0 to n => Code corresponding to status messages or to messages indicating inverter malfunction.

Example:

```
27/06/11-10:04:51;INV; FRO_INV_b0.ini; 23252320000;6;4
```

Mechanism for censoring alarms

For status variables configured as alarms, it is possible to specify, in the definition file, which values are to be censored, i.e. for which an alarm report should not be uploaded, even though the action code is 8.

This mechanism means that an alarm is not uploaded if the value taken by a variable with an action code of 8 has been declared in the list of values to be ignored.

The list of values to be ignored is specific to each variable declared in the definition file with the action code Alarm (8), and is written in the field following that containing the Alarm action code.
The values to be censored are separated by the pipe symbol “|”.

Example with the variable InverterStatus:
The declaration line for this variable can be found in the definition file:

```
6;55;;;InverterStatus;;;;8;1|3;
```

In this case, if the variable takes the value 1 (Startup) or 3 (Manual Standby), the new value will indeed be recorded in the data file, but will not cause an alarm to be raised.

8 Fronius inverter command files

It is not possible to send commands to Fronius inverters.