Appendix for SMA inverters:

Sunny Boy

Sunny Mini Central

Sunny Tri-Power

Via interface RS485

WebdynSun

The monitoring gateway for your solar installation

CONTENTS

1 Introduction 3
2 Connecting the gateway to SMA inverters 3
2.1 Activating/deactivating the bus terminator plug: 3
2.2 Connecting inverters to the RS485 bus: 4
3 Configuring and declaring inverters 5
3.1 Discovering inverters 5
3.2 Declaring inverters 5
3.3 Definition files 6
3.4 SMA definition file format option 9
4 Using inverter data 10
4.1 Data files 10
4.2 Parameter files 10
4.3 Alarm files 11

1 Introduction

This appendix describes all the specific considerations involved in the protocol governing communication with SMA SunnyBoy, Sunny Mini Central and Sunny Tripower inverters over RS485. It complements the chapter “Inverter management” of the WebdynSun Operating Manual MU_WebdynSun, available for download from our site http://www.webdynsun.com.

2 Connecting the gateway to SMA inverters

- All wiring must be carried out only by a specialised qualified electrician.
- Prior to installation, all equipment connected to the corresponding communications bus must be disconnected on both sides (DC and AC).
- Respect all safety recommendations appearing in inverter documentation.

Communication with the inverters is via a 2-wire RS485 bus in Half-Duplex mode. This is achieved through the use of the RS485(A) port on the WebdynSun, which is dedicated to inverters.

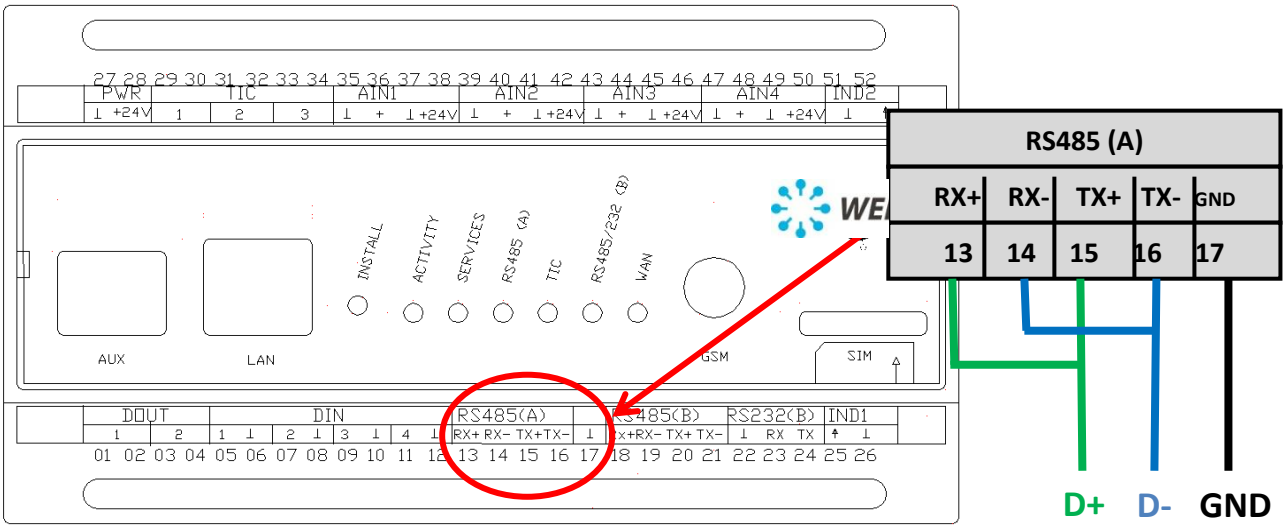

The WebdynSun can handle up to 100 inverters.

2.1 Activating/deactivating the bus terminator plug

The gateway may be located at the end of the RS485 communications bus or in the middle of the bus.

To ensure correct operation of the RS485 data bus, it must be fitted with a 120 ohm termination plug at both ends. Depending on the position of the gateway on the bus, this plug must be enabled or disabled via a pair of jumpers mounted inside the casing.

Before installing the WebdynSun unit, check that the bus terminator jumpers are correctly positioned.

> By default, the gateway is configured to be located at the end of a 4-wire RS485 bus. Consequently, the jumpers are plugged into the “Activation” position of the 120 ohm terminator plug.
> As the SMA bus has 2 wires, jumper JMP3 must be removed.

Only jumper JMP2 inside the casing must be positioned to activate the 120 ohm bus termination plug.

The terminator plug must be activated where the gateway is placed at the end of the RS485 bus, and deactivated where it is in the middle of the bus.

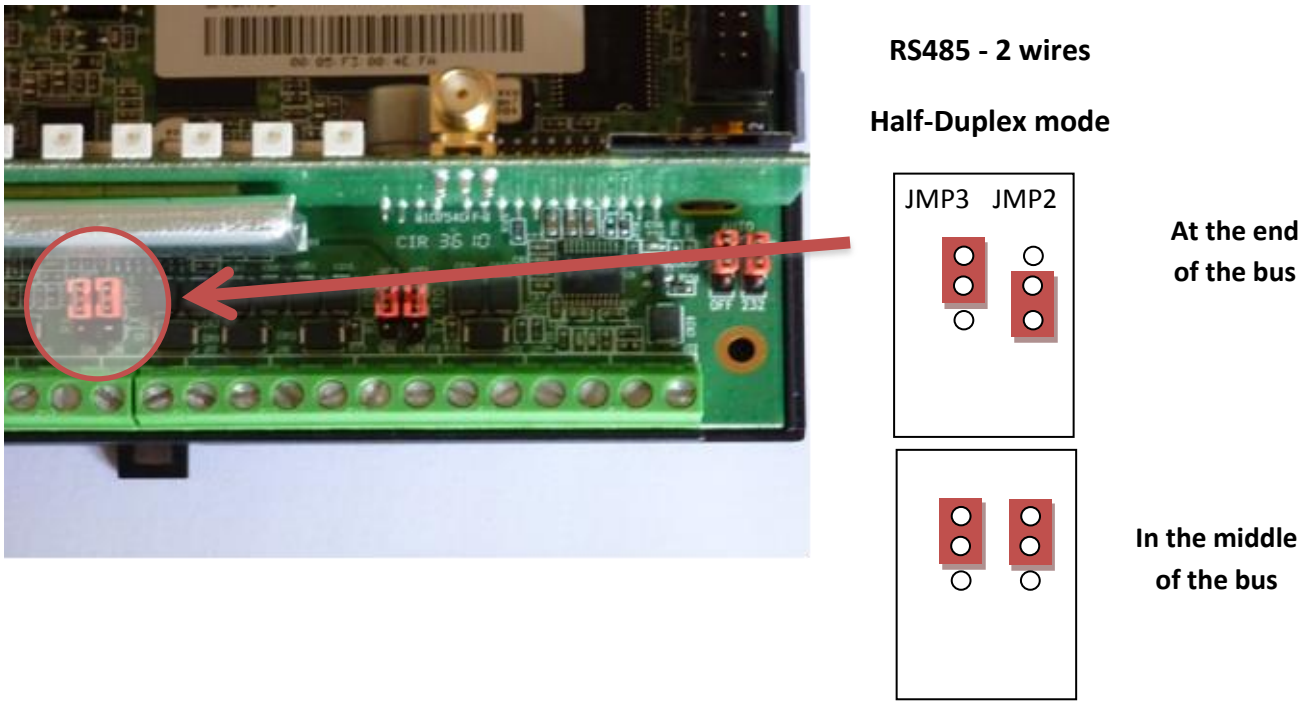

2.2 Connecting inverters to the RS485 bus

Consult the inverter documentation regarding the principles governing RS485 connection and wiring. Once the RS485 cable has been brought up to the gateway:

1. Strip around 4 cm of the outer sheath from the RS485 communications cable.
2. Trim the shielding back to match the cable sheath.
3. Bare around 6 mm of the wires.
4. Connect the conductors to the connector marked RS485(A), respecting the allocations in your RS485 communications bus.

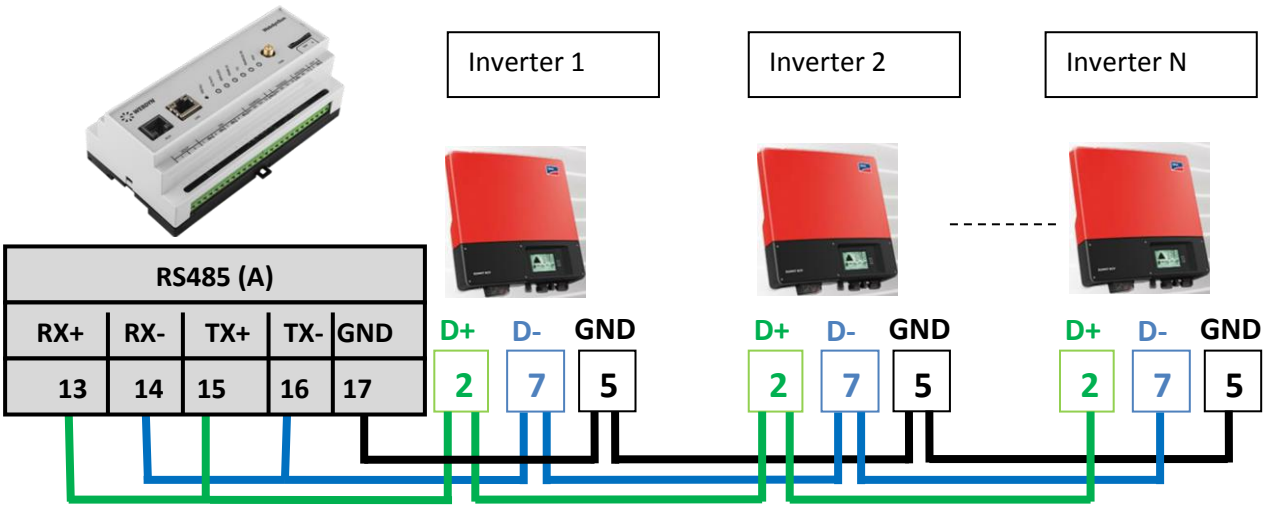

3 Configuring and declaring inverters

Check that the parameter "INV_Type" in the configuration file *prefixID*_config.ini is correctly set before performing any configuration on the inverters. It should have the value 0 to select the inverter protocol "SMA – SMA net".

3.1 Discovering inverters

Discovery of inverters is mandatory under the SMA protocol, as it is the only way of retrieving the set of variables and parameters for the inverters present on the bus. This discovery must be carried out after the inverters are brought into service.

When discovering SMA devices, the WebdynSun begins by addressing the inverters, then creates specific definition files for each inverter. The rule for naming these files is: *prefixID*_INV_*deviceType*.ini, with *deviceType* corresponding to the inverter type and version.

The files *prefixID*_INV.ini, *prefixID*_daq.ini, and the definition files for the devices discovered will be uploaded to the remote server on the next FTP connection, unless they are already present on the server.

3.2 Declaring inverters

Inverters are declared via the configuration file *prefixID*_daq.ini. This file is automatically generated after the launch of the inverter discovery process.

The file *prefixID*_daq.ini should contain the information described below:

INV_SN[*index*]=*InverterSerialNumber*
INV_FileDefName[*index*]=*prefixID*_INV_*deviceType*.ini

Where:

index: Index of the INV unit declared (0 to 99).
InverterSerialNumber: Serial number of the inverter detected

Example:

```
INV_SN[0]=2000388220
INV_FileDefName[0]=prefixID_INV_WR21TL09.ini
INV_SN[1]=9343
INV_FileDefName[1]=prefixID_INV_SENS0500.ini
```

The gateway will not begin to collect data as long as the *prefixID*_daq.ini and the generated definition files are not present on the remote FTP server.

3.3 Definition files

index: Index of

Each inverter is characterised by its definition file. These files are generated automatically by the WebdynSun during inverter discovery.

They are uploaded to the remote FTP server by the gateway on its next connection. The files may be modified by the user as required.

Every parameter or variable to be collected is defined in the definition file, according to the following format:

```
index;channel(*);type(*);format(*);name;unit;coefA;coefB;action
```

(*) Parameter not user modifiable.

Where:

the variable to be collected.
channel: Channel number of the variable to be collected
type: Type of variable to be collected
format: Format of the variable to be collected
name: Name of the variable to be collected
Unit: Units of the variable to be collected
coefA and coefB: Scaling coefficients
action: Action to be performed on the variable

0: Variable not collected
1: Variable treated as read-only parameter.
17: Variable treated as read-write parameter.
2: Min/max/avg values.
4: Instantaneous value.
8: Variable treated as an alarm.

For the definitions of the channels, please consult the inverter documentation.

Depending on the variable type, several actions are applicable:

Variable type	Variable format	Possible actions
Instantaneous variables	Numerical	0, 4
	Counter	0, 4
	Analogue	0, 2, 4
	Status	0, 4, 8
Parameters		0, 1,17

N.B. If the action defined is not consistent with the variable type, it is ignored.

Example:

```
1;1;0401;0102;SMA-SN        ;      ;0.000000;4294899968.000000;1
2;2;0401;0104;Upv-Start     ;V     ;250.000000;600.000000;1
3;3;0401;0104;T-Start       ;s     ;5.000000;1600.000000;1
4;4;0401;0104;T-Stop        ;s     ;1.000000;3600.000000;1
5;5;0401;0104;dU U-Konst    ;V/s   ;5.000000;100.000000;1
6;6;0401;0104;dU-Mpp Track  ;V/TaMpp;0.320000;10.000000;1
7;7;0401;0104;I Such neu    ;mA    ;0.000000;6000.000000;1
8;8;0401;0104;Usoll-Konst   ;V     ;250.000000;600.000000;1
9;9;0401;0104;Isoll-Konst   ;%     ;0.000000;100.000000;1
10;10;0401;0104;KP_Ureg SMA  ;      ;0.000000;20.000000;1
11;11;0401;0104;KI-Ureg SMA  ;      ;0.000000;10.000000;1
12;12;0401;0104;KD-Ureg SMA  ;      ;0.000000;1.000000;1
13;13;0401;0104;Pmax         ;W     ;0.000000;5550.000000;1
14;14;0401;0104;Plimit       ;W     ;5500.000000;5500.000000;1
15;15;0401;0104;I-NiTest     ;mA    ;0.000000;25000.000000;1
16;16;0401;0104;Cnt-Imax     ;      ;1.000000;1000.000000;1
17;17;0401;0104;AntiIsland-Ampl;grd  ;0.000000;10.000000;1
18;18;0401;0104;AntiIsland-Freq;mHz  ;0.100000;2000.000000;1
19;19;0401;0104;Upv-Max      ;V     ;250.000000;600.000000;1
20;20;0401;0104;LDVtgC       ;V     ;0.000000;50.000000;1
21;21;0401;0104;Uac-Min      ;V     ;160.000000;230.000000;1
22;22;0401;0104;Uac-Max      ;V     ;230.000000;300.000000;1
23;23;0401;0104;ACVtgRPro    ;V     ;230.000000;300.000000;1
24;24;0401;0104;Uac-Tavg     ;ms    ;20.000000;2000.000000;1
25;25;0401;0104;Fac-delta-   ;Hz    ;0.100000;4.500000;1
26;26;0401;0104;Fac-delta+   ;Hz    ;0.100000;4.500000;1
27;27;0401;0104;Fac-Tavg     ;ms    ;20.000000;2000.000000;1
28;28;0401;0104;dFac-Max     ;Hz/s  ;0.100000;4.000000;1
29;29;0401;0104;dZac-Max     ;mOhm  ;0.350000;20000.000000;1
30;30;0401;0104;Riso-Min     ;kOhm  ;0.000000;10000.000000;1
31;31;0401;0104;Tkk-Max      ;grdC  ;0.000000;101.000000;1
32;32;0401;0104;Upv-Fakt     ;      ;0.025000;100.000000;1
33;33;0401;0104;Iso-Fakt     ;      ;0.003000;0.010000;1
34;34;0401;0104;It-Fakt      ;1/mA  ;22.000000;27.000000;1
```

```
35;35;0401;0104;Hardware-BFS   ;Version;0.000000;100.000000;1
36;36;0401;0104;Software-BFR   ;Version;0.000000;100.000000;1
37;37;0401;0104;Software-SRR   ;Version;0.000000;100.000000;1
38;38;0401;0104;SMA-Grid-Guard ;Version;0.000000;100.000000;1
39;39;0401;0104;Uac-BFR-Fakt   ;      ;0.361950;0.400050;1
40;40;0401;0104;Uac-SRR-Fakt   ;      ;0.236550;0.261450;1
41;41;0401;0104;AD0-3KorrFakt  ;      ;29491.000000;36044.000000;1
42;42;0401;0104;AD0-3KorrOffs  ;      ;9000.000000;11000.000000;1
43;43;0401;0104;AD4-7KorrFakt  ;      ;29491.000000;36044.000000;1
44;44;0401;0104;AD4-7KorrOffs  ;      ;9000.000000;11000.000000;1
45;45;0401;0102;Inst.-Code     ;      ;0.000000;4294899968.000000;1
46;46;0401;0104;E_Total        ;kWh   ;0.000000;200000.000000;1
47;47;0401;0104;h_Total        ;h     ;0.000000;200000.000000;1
48;48;0401;0104;UdcWindStart   ;V     ;1.000000;600.000000;1
49;49;0401;0104;UdcWindMid     ;V     ;1.000000;600.000000;1
50;50;0401;0104;UdcWindMax     ;V     ;1.000000;600.000000;1
51;51;0401;0104;KP-Wind-Reg    ;      ;0.000000;0.250000;1
52;52;0401;0104;KI-Wind-Reg    ;      ;0.000000;0.250000;1
53;53;0401;0104;Fac-Start delta;Hz    ;0.000000;5.000000;1
54;54;0401;0104;Fac-Limit delta;Hz    ;0.000000;5.000000;1
55;55;0401;0104;T-Stop-Fan     ;grdC  ;0.000000;100.000000;1
56;56;0401;0104;T-Start-Fan    ;grdC  ;0.000000;100.000000;1
57;57;0401;0104;T-Max-Fan      ;grdC  ;0.000000;100.000000;1
58;58;0401;0104;Fan-Test       ;      ;0.000000;1.000000;1
59;59;0401;0104;P-Wind-Ramp    ;W/s   ;10.000000;2000.000000;1
60;60;0401;0104;P-Wind-Mid     ;W     ;10.000000;5000.000000;1
61;61;0401;0104;Ripple-Ctl-Lev ;%     ;0.500000;8.000000;1
62;62;0401;0104;Ripple-Ctl-Frq ;Hz    ;105.000000;1605.000000;1
63;1;0408;0100;Betriebsart    ;;;;1
64;2;0408;0100;Speicherfunkt. ;;;;1
65;3;0408;0100;SMA -Funktion  ;;;;1
66;4;0408;0100;Default        ;;;;1
67;5;0408;0100;Control        ;;;;1
68;6;0408;0100;Ripple-Ctl-Rcvr;;;;1
69;7;0408;0100;PowerBalancer  ;;;;1
70;1;0901;0101;Upv-Ist        ;V     ;1.000000;0.000000;2
71;2;0901;0101;Upv-Soll       ;V     ;1.000000;0.000000;2
72;3;0901;0101;Iac-Ist        ;A     ;0.002000;0.000000;2
73;4;0901;0101;Iac-Soll       ;%     ;1.000000;0.000000;2
74;5;0901;0101;Uac            ;V     ;1.000000;0.000000;2
75;6;0901;0101;Fac            ;Hz    ;0.010000;0.000000;2
76;7;0901;0101;Pac            ;W     ;1.000000;0.000000;2
77;8;0901;0101;Zac            ;Ohm   ;0.001000;0.000000;2
78;9;0901;0101;dZac           ;Ohm   ;0.001000;-5.000000;2
79;10;0901;0101;Riso          ;kOhm  ;1.000000;0.000000;2
```

```
80;11;0901;0101;Uac-Srr      ;V     ;1.000000;0.000000;2
81;12;0901;0101;Fac-Srr      ;Hz    ;0.010000;0.000000;2
82;13;0901;0101;Zac-Srr      ;Ohm   ;0.001000;0.000000;2
83;14;0901;0101;Izac         ;A     ;0.001000;0.000000;2
84;15;0901;0101;Tkk          ;grdC  ;0.100000;0.000000;2
85;16;0901;0101;Ipv          ;A     ;0.001000;0.000000;2
86;17;0901;0101;Tkk max      ;grdC  ;0.100000;0.000000;2
87;18;0901;0101;Upv max      ;V     ;1.000000;0.000000;2
88;19;0901;0101;U-Fan        ;V     ;0.001000;0.000000;2
89;20;0901;0101;Freq1        ;Hz    ;0.100000;0.000000;2
90;21;0901;0101;Freq2        ;Hz    ;0.100000;0.000000;2
91;22;0901;0101;Freq3        ;Hz    ;0.100000;0.000000;2
92;23;0901;0101;Freq4        ;Hz    ;0.100000;0.000000;2
93;24;0901;0101;Freq5        ;Hz    ;0.100000;0.000000;2
94;25;0901;0101;FreqRes      ;Hz    ;0.100000;0.000000;2
95;26;0901;0101;FreqCnt      ;      ;1.000000;0.000000;2
96;1;0904;0102;E-Total       ;kWh   ;0.001000;;4
97;2;0904;0102;h-Total       ;h     ;0.000278;;4
98;3;0904;0102;h-On          ;h     ;0.000278;;4
99;4;0904;0102;Netz-Ein      ;      ;1.000000;;4
100;5;0904;0102;Event-Cnt    ;      ;1.000000;;4
101;6;0904;0102;Seriennummer ;      ;1.000000;;4
102;1;0908;0100;Status       ;;;;8
103;2;0908;0100;Balancer     ;;;;8
104;3;0908;0100;Fehler       ;;;;8
```

3.4 SMA definition file format option

The status and error codes from SMA inverters vary according to the inverter family or version. It is therefore possible to activate a definition file format option, which produces a listing of the possible values for status-type variables. This is done by setting the variable “INV_FileDefOption” to 1 in the configuration file *prefixID*_config.ini prior to inverter discovery.

Example:

If INV_FileDefOption=0, the variable “Status” of the definition file will have the following format:

```
76;1;0908;0100;Status       ;;;;8
```

If INV_FileDefOption=1, the variable “Status” of the definition file will have the following format:

```
76;1;0908;0100;Status;0:Offset|1:Stop|2:Netzueb.|3:Warten|4:U-Konst|5:I-Konst|6:Mpp-
Such|7:Mpp|8:Stoer.|9:Fehler|10:MppPeak|11:Derating|12:Zuschalt.|13:Uac/Rel|14:Stop
1|15:Calib;;;8
```

The seventh field indicates the list of the possible states of this variable.
Each value is separated by the pipe character “|”.

The variable “Status” can therefore take 16 values from 0 to 15:

0:Offset 1:Stop 2:Netzueb. 3:Warten 4:U-Konst 5:I-Konst 6:Mpp-Such 7:Mpp 8:Stoer. 9:Fehler 10:MppPeak 11:Derating 12:Zuschalt. 13:Uac/Rel 14:Stop 1 15:Calib

Please see the manufacturer’s documentation for the meaning of each value of the variable.

	For the definition file format option to be taken into account, the variable “INV_FileDefOption” must be set to 1 before the inverter discovery phase is launched. A definition file generated with this formatting option will not be compatible with versions of WebdynSun prior to V2.02.02.

4 Using inverter data

4.1 Data files

SMA inverter data files comply with the format described in the WebdynSun Operating Manual.

4.2 Parameter files

SMA parameter files comply with the format described in the WebdynSun Operating Manual.

Some SMA inverters can be configured using a command file.

	We must draw your attention to the risks associated with uncontrolled modification of SMA inverter parameters. The consistency of the data sent out to the inverter must be checked on the server side before generating the command file.

Only variables defined as read-write parameters in the definition file can be modified.

```
index;type;parameter1;parameter2;parameter3
```

Where:

index	1 to N: Unique Identifier enabling the command to be identified
type	INV: Command type is Inverter
parameter1	Inverter serial number
parameter2	Channel number of the parameter to be modifier (first field in the definition file).
parameter3	Value of the parameter to be changed

It is advisable to request a report of all the inverter parameters after the update, for checking purposes.

Acknowledgement file:

The acknowledgement file (*IDSite*_ACK_*AAMMJJ_hhmmss*.csv) mirrors the command file, with timestamps added, and the acknowledgement:

```
dateTime;index;parameter1;parameter2;parameter3;Ack
```

Where Ack=OK or ERROR.

Example:
Command file:

```
1;INV;2000388220;2;153.00;
3;GATEWAY;GET_INV_PARAMS;
```

1 => The variable with index 2, (Upv-start) is to change to 153.00 V.
2 => Request for inverter parameters.

Acknowledgement file associated:

```
15/11/10-14:57:20;1;INV;2000388220;2;153.00;;;OK
15/11/10-14:57:20;2;GATEWAY;GET_INV_PARAMS;;;OK
```

4.3 Alarm files

All variables defined with an Action field of 8 in the definition file generate an alarm when they change status.

An alarm is transmitted to the remote server in the form of a file on the FTP server (*IDSite*_AL_*YYMMDD_hhmmss*.csv.gz).
The data stored is also uploaded at the same time as an alarm.

Alarm of the SMA type:

These alarms are uploaded on a change in the state of a "status" variable defined as an alarm in the associated definition file.

dateTime;type;field1;field2;field3;field4

Where:

dateTime	Timestamp when alarm triggered, in format YY/MM/DD-hh:mm:ss
type	INV: Alarm type is SMA
field1	*prefixID*_INV_*type*.ini: Name of reference definition file
field2	Serial number of the triggering SMA inverter
field3	1 to N: Index of the triggering data item in the associated definition file.
field4	Status of the trigger item: 0 to n => Code corresponding to the status messages or messages indicating inverter malfunction.

Example:

09/10/09-08:45:38;INV;WEBDYN01_INV_WR21TL09.ini;2000388220;77;28

Mechanism for censoring alarms

For status variables configured as alarms, it is possible to specify, in the definition file, which values are to be censored, i.e. for which an alarm report should not be uploaded, even though the action code is 8.

This mechanism means that an alarm is not uploaded if the value taken by a variable with an action code of 8 has been declared in the list of values to be ignored.

The list of values to be ignored is specific to each variable declared in the definition file with the action code Alarm (8), and is written in the field following that containing the Alarm action code.

The values to be censored are separated by the pipe symbol "|".

Example using the variable Error485i:
The declaration line for this variable is in the definition file.

98;1;0908;0102;Error485i;;;;8;1|4;

In this case, if the variable takes the value 1 (KP-Com Error) or 4 (OK/Para), the new value will indeed be saved to the data file, but no alarm will be uploaded.