Appendix for DANFOSS inverters

ComLynx protocol

WebdynSun

The monitoring gateway for your solar installation

CONTENTS

1 Introduction 3
2 Connecting the gateway to Danfoss inverters via the RS485(A) communications bus 3
2.1 Connecting at the end of the bus 4
2.2 Connecting in the middle of the bus 6
3 Configuring the inverters 8
3.1 Discovering inverters 8
3.2 Inverter definition file 8
4 Inverter parameter files 12
5 Inverter alarm files 13
6 Inverter command files 13

1 Introduction

The present document describes the operations of the WebdynSun gateway in conjunction with Danfoss TripleLynx (TLX) and UniLynx (ULX) inverters.

The gateway can handle a maximum of 100 inverters, but the ComLynx protocol is limited to 64 inverters.

The WebdynSun gateway can handle 64 Danfoss ComLynx inverters.
The number of inverters may be limited by the characteristics of your RS485 bus. The EIA/TIA-485 standard specifies a maximum of 32 peripherals and a total bus length of 1200 metres. Beyond this, it may prove necessary to use repeaters.

2 Connecting the gateway to Danfoss inverters via the RS485(A) communications bus

⚠	All wiring must be carried out only by a specialised qualified electrician. Prior to installation, all equipment connected to the corresponding communications bus must be disconnected on both sides (DC and AC). Respect all safety recommendations appearing in inverter documentation.

Connecting inverters to the RS485 bus:

Consult the inverter documentation regarding the principles governing RS485 connection and wiring.

Once the RS485 cable has been brought up to the gateway:

1. Strip around 4 cm of the outer sheath from the RS485 communications cable.
2. Trim the shielding back to match the cable sheath.
3. Bare around 6 mm of the wires.
4. Connect the conductors to the connector marked RS485(A), respecting the allocations in your RS485 communications bus.

The gateway may be connected at the end of the RS485 communications bus or in the middle of the bus.

2.1 Connecting at the end of the bus

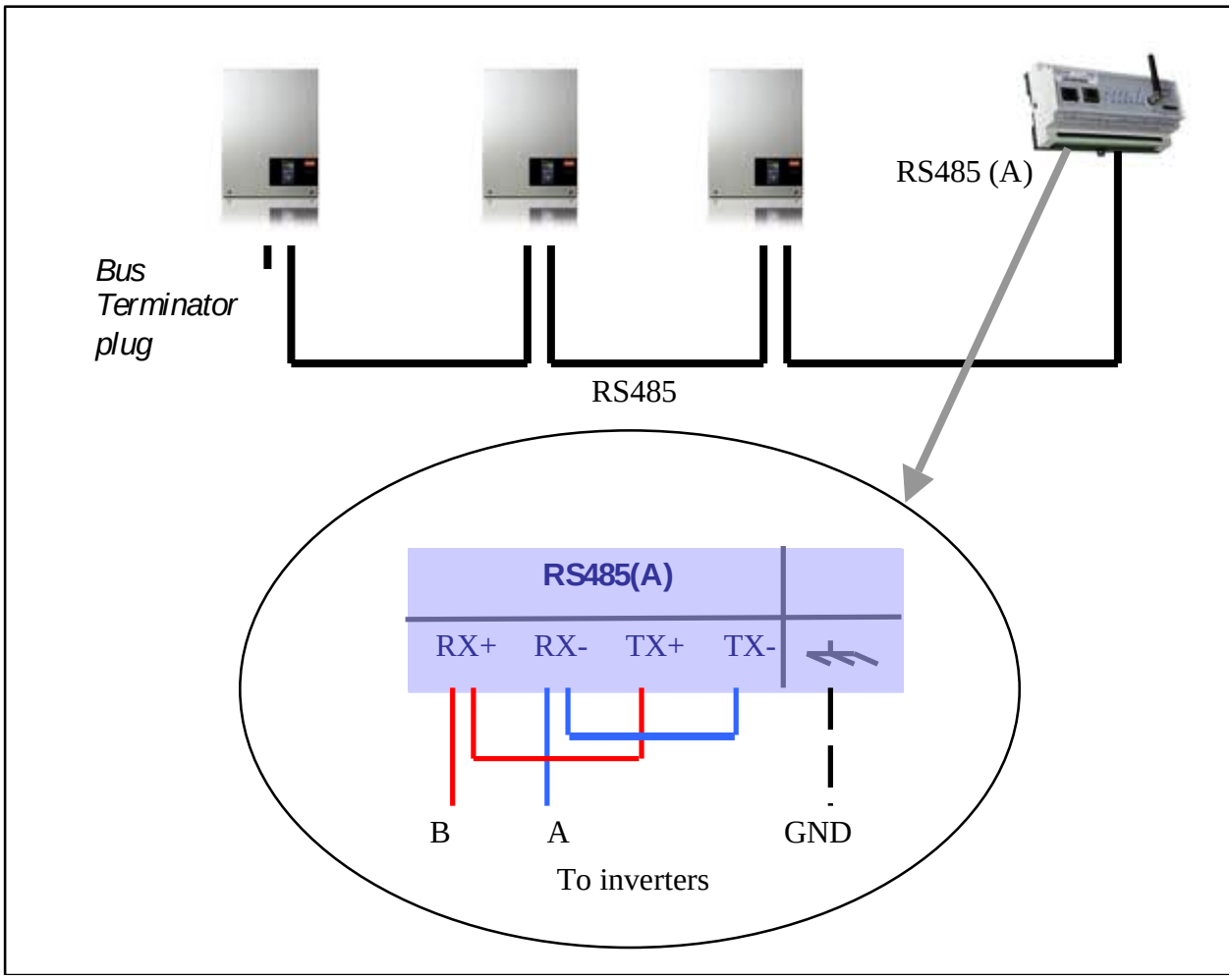

To ensure correct operation of the RS485 data bus, it must be fitted with a 120 ohm termination resistor at both ends.

Please refer to the inverter manufacturer's documentation to see how to provide termination on the inverter end. At the WebdynSun end, this function is provided by configuring the jumpers JMP2 and JMP3.

Positions of the JMP2 and JMP3 jumpers on the gateway:
Only the JMP2 jumper inside the casing needs to be set to activate the 120 ohm bus terminator plug.

	By default, the gateway is configured to be located at the end of a 4–wire RS485 bus. Consequently, the jumpers are plugged into the "Activation" position of the 120 ohm terminator. As the Danfoss bus is a 2–wire bus, the JMP3 jumper must be removed.

Hardware version 1:

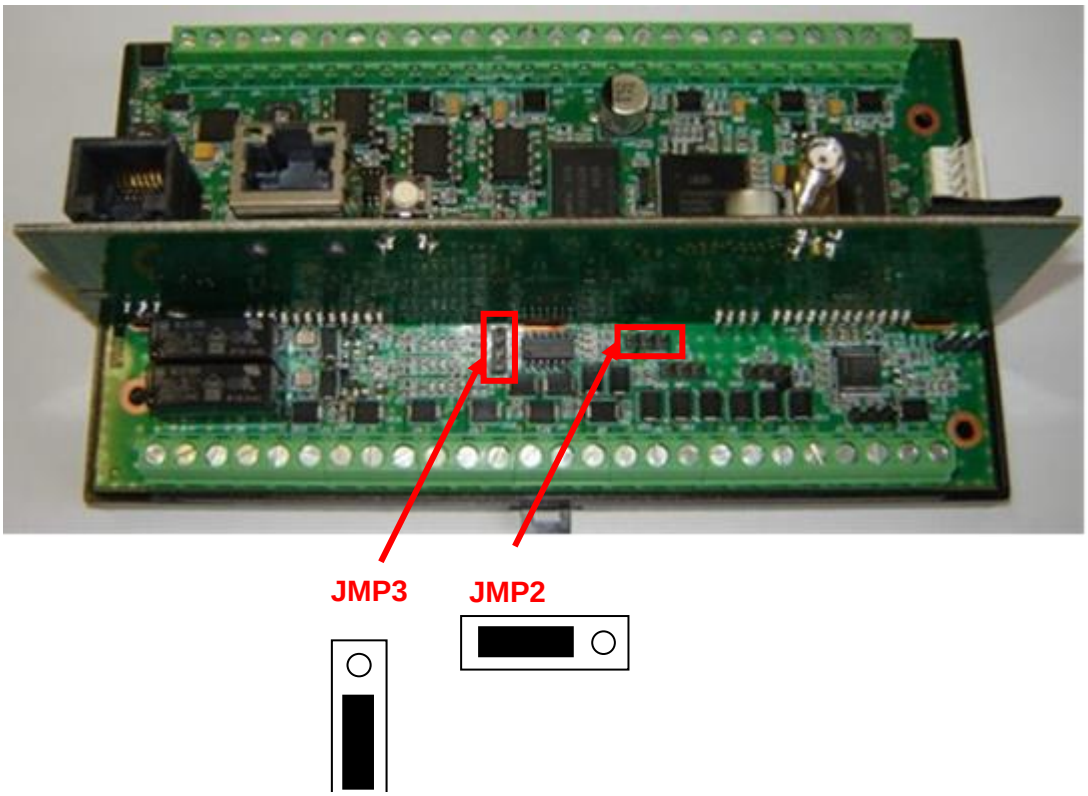

Hardware version 2:

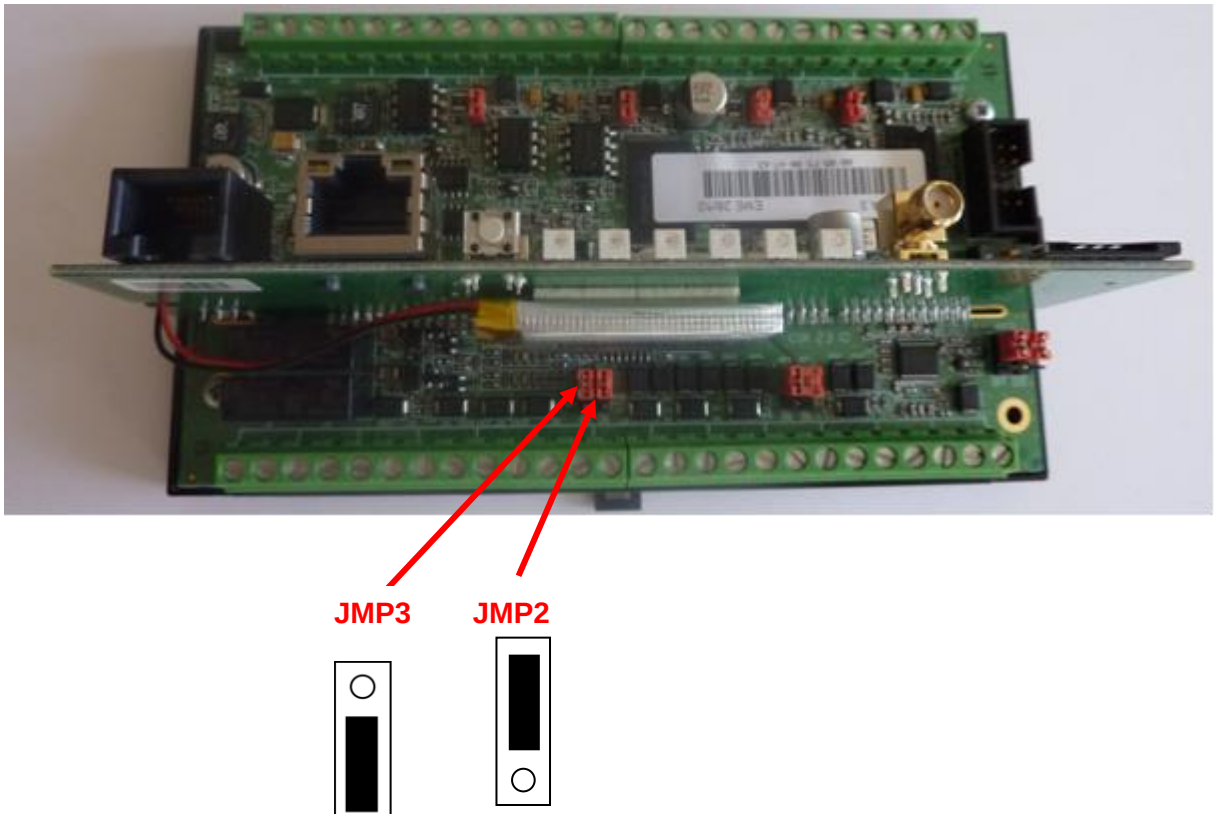

2.2 Connecting in the middle of the bus

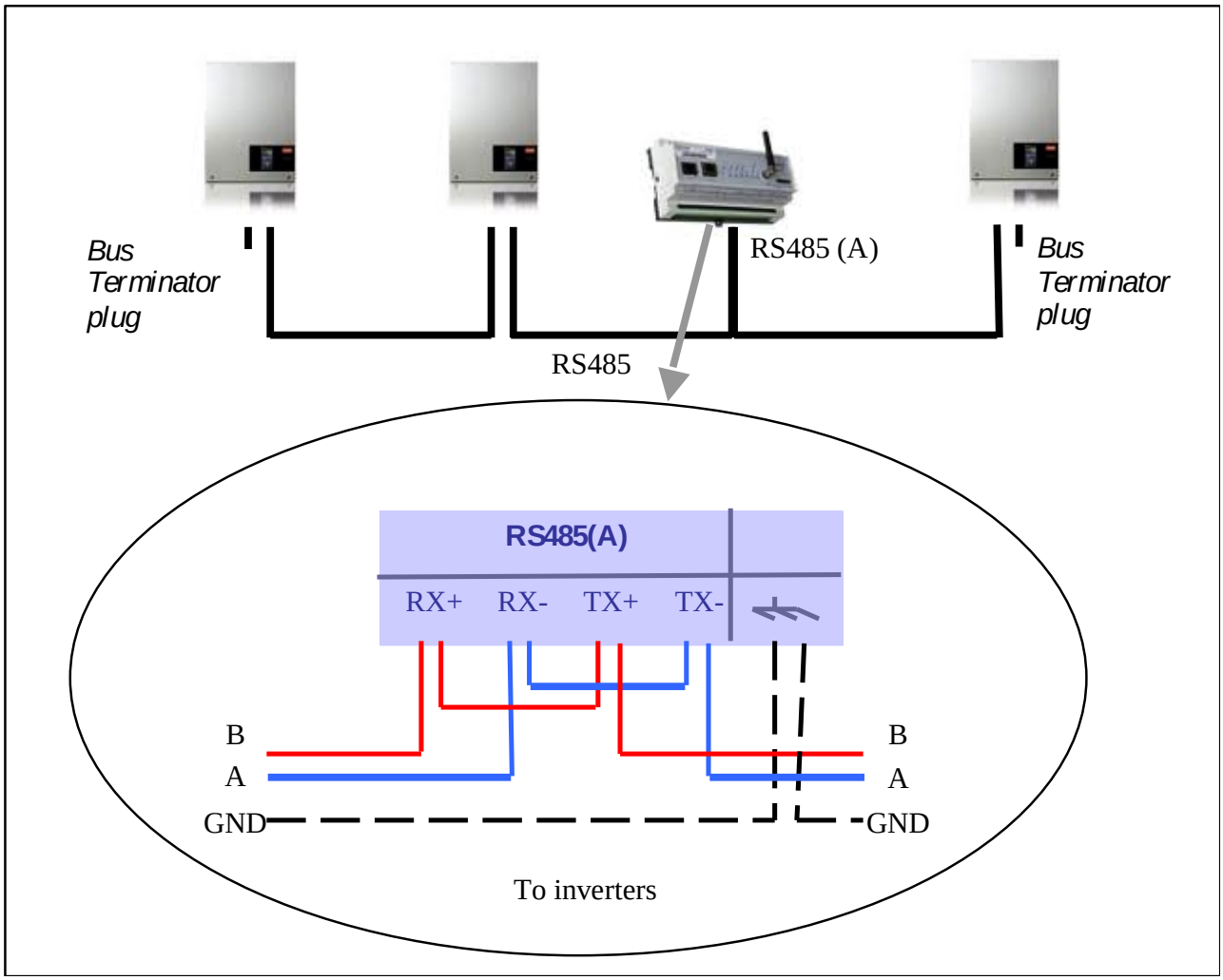

Positions of the JMP2 and JMP3 jumpers on the gateway:
Both the JMP2 and the JMP3 jumpers inside the casing must be positioned so as to deactivate the 120 ohm bus terminator plug.

Hardware version 1:

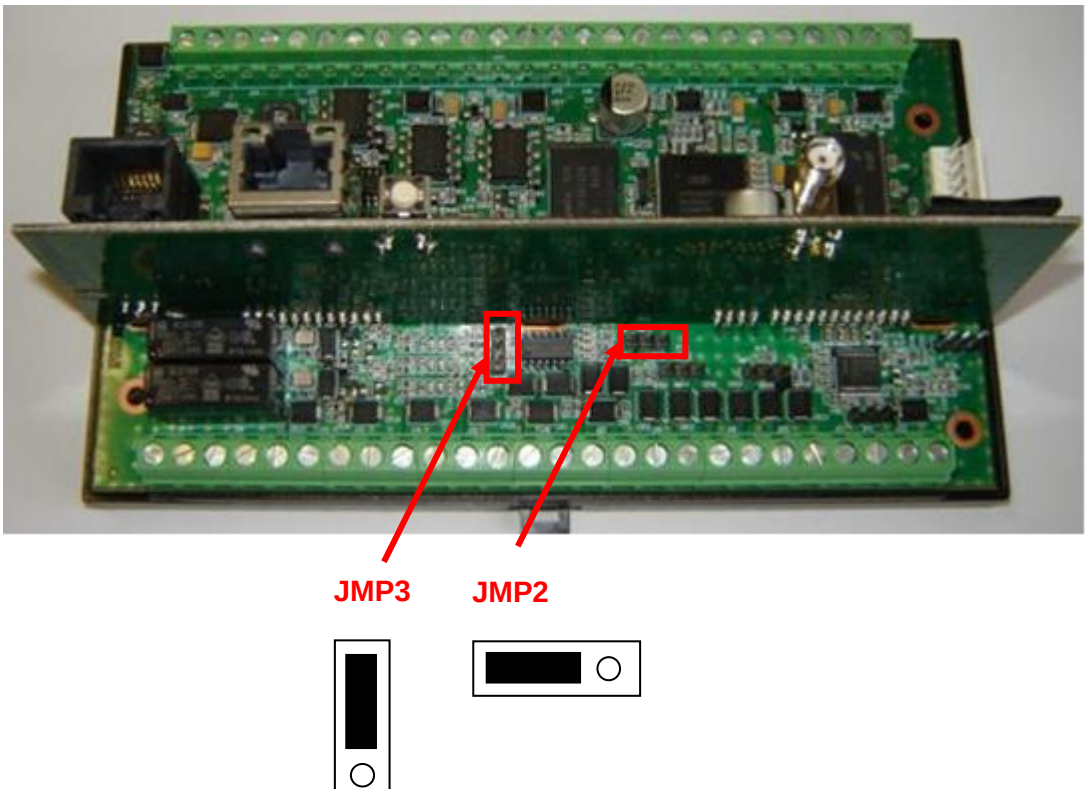

Hardware version 2:

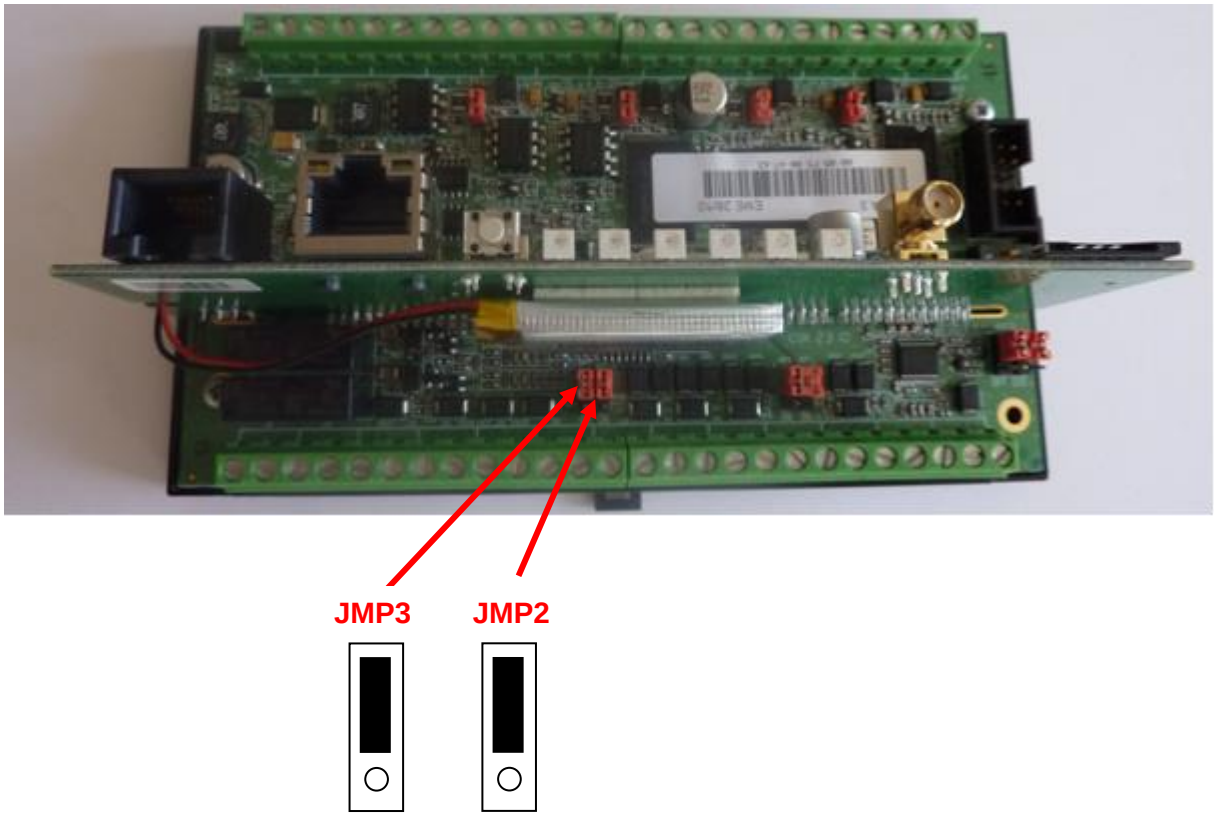

3 Configuring the inverters

To be visible to the gateway, the TripleLynx or UniLynx inverter must be configured for operations via RS485, and must have an address. This address must be unique on the bus.

Addressing is manual for the TripleLynx model, and is carried out via the configuration menu of the inverter. Please refer to the manufacturer's documentation to perform this configuration.
Addressing is automatic and non-configurable for the UniLynx model.

Every inverter must be correctly configured before configuring the gateway.

At every restart, the gateway performs a search for inverters that are configured and present on the bus. That is why we recommend using methodical addressing without any gaps, beginning with the address 1,1,1 (Network=1, Subnet=1, Node=1) up to 1,1,N.
Otherwise, the startup phase of the WebdynSun will take a longer time.

3.1 Discovering inverters

The ComLynx protocol from Danfoss allows for discovery of inverters via the built-in Web server or via a command file. The discovery process can provide the server with the list of the inverters available on the bus, but is not sufficient for data acquisition. For this purpose, it is imperative that the FTP server and the gateway be synchronised. For further details, please refer to the "Operating Manual" for the WebdynSun.

During the inverter discovery phase, the file *IDsite*_daq.ini is regenerated with the following information for each inverter:

```
INV_SN[index]=serial number
INV_FileDefName[index ]=definition file associated
INV_INFO[index ]=address of the inverter in hexadecimal
```

Example:

```
INV_SN[0]=189500P1909_0
INV_FileDefName[0]=IDSITE_INV_A0024010501.ini
INV_INFO[0]=0x110A
```

3.2 Inverter definition file

The role of this file is to describe the full set of variables available for an inverter.

For each variable, it describes:
- its retrieval method: used by the gateway to capture the data idem within the inverter;
- its processing method: average, instantaneous, parameter or alarm;
- its formatting: name, units and scaling coefficient.

This file is uploaded by the gateway after an inverter discovery phase. Some fields may be modified by the user.

The Danfoss ComLynx protocol allows each variable to be captured individually. On installation, the gateway uploads a default definition file containing the set of all variables available for each inverter. If you do not wish to collect all the variables from the inverter, it is advisable to select those you do want via this file. This is to reduce the volume of the uploaded data, and the collection time per inverter.

The data capture time for a TripleLynx inverter is 4 seconds, with no modifications to the definition file.

Filename format:

IDSite_* INV_*Family.ini

Example of the description of a Danfoss variable:

1;2561;C808D0;010207;TotalEnergyProduction;Wh;1;0;4

- 4: action: instantaneous variable
- 0: scaling coefficient B
- 1: scaling coefficient A
- Wh: units of the variable
- TotalEnergyProduction: variable name
- 010207: Information on the variable capture request
- C808D0: Information on the variable capture request
- 2561: Variable type
- 1: Variable index

XXXX: Parameter not user modifiable

The action to be applied to each variable is specified at the end of the line:

- ***Action=0***: Variable not collected.
- ***Action=1***: Variable treated as read-only parameter.
- ***Action=2***: Min/max/avg values.
- ***Action=4***: Instantaneous value.
- ***Action=8***: Variable treated as an alarm.

Details of the definition file for a TripleLynx inverter:

```
1;2561;C808D0;010207;TotalEnergyProduction;Wh;1;0;4
2;2561;C808D0;022806;PV Voltage input 1;V;0.1;0;2
3;2561;C808D0;022906;PV Voltage input 2;V;0.1;0;2
4;2561;C808D0;022A06;PV Voltage input 3;V;0.1;0;2
5;2561;C808D0;022D06;PV Current input 1;mA;1;0;2
```

```
6;2561;C808D0;022E06;PV Current input 2;mA;1;0;2
7;2561;C808D0;022F06;PV Current input 3;mA;1;0;2
8;2561;C808D0;023206;PV Power input 1;W;1;0;2
9;2561;C808D0;023306;PV Power input 2;W;1;0;2
10;2561;C808D0;023406;PV Power input 3;W;1;0;2
11;2561;C808D0;023707;PV Energy input 1;Wh;1;0;4
12;2561;C808D0;023807;PV Energy input 2;Wh;1;0;4
13;2561;C808D0;023907;PV Energy input 2;Wh;1;0;4
14;2561;C808D0;023C06;Grid Voltage L1;V;0.1;0;2
15;2561;C808D0;023D06;Grid Voltage L2;V;0.1;0;2
16;2561;C808D0;023E06;Grid Voltage L3;V;0.1;0;2
17;2561;C808D0;025B06;Grid Voltage 10-min mean L1;V;0.1;0;4
18;2561;C808D0;025C06;Grid Voltage 10-min mean L2;V;0.1;0;4
19;2561;C808D0;025D06;Grid Voltage 10-min mean L3;V;0.1;0;4
20;2561;C808D0;025E03;Grid Voltage L1-L2;V;0.1;0;4
21;2561;C808D0;025F03;Grid Voltage L2-L3;V;0.1;0;4
22;2561;C808D0;026003;Grid Voltage L3-L1;V;0.1;0;4
23;2561;C808D0;023F07;Grid Current L1;mA;1;0;2
24;2561;C808D0;024007;Grid Current L2;mA;1;0;2
25;2561;C808D0;024107;Grid Current L3;mA;1;0;2
26;2561;C808D0;024207;Grid Power L1;W;1;0;2
27;2561;C808D0;024307;Grid Power L2;W;1;0;2
28;2561;C808D0;024407;Grid Power L1;W;1;0;2
29;2561;C808D0;024607;Instant Energy Production;W;1;0;2
30;2561;C808D0;024707;Grid Energy Today L1;Wh;1;0;4
31;2561;C808D0;024807;Grid Energy Today L2;Wh;1;0;4
32;2561;C808D0;024907;Grid Energy Today L3;Wh;1;0;4
33;2561;C808D0;024A07;Grid Energy Today Total;Wh;1;0;4
34;2561;C808D0;024B07;Grid Energy Today S0;Wh;1;0;4
35;2561;C808D0;024C04;Grid Current DC Content L1;mA;1;0;4
36;2561;C808D0;024D04;Grid Current DC Content L2;mA;1;0;4
37;2561;C808D0;024E04;Grid Current DC Content L3;mA;1;0;4
38;2561;C808D0;026107;Grid Frequency L1;MHz;1;0;4
39;2561;C808D0;026207;Grid Frequency L2; MHz;1;0;4
40;2561;C808D0;026307;Grid Frequency L3; MHz;1;0;4
41;2561;C808D0;025007;Grid Frequency mean; MHz;1;0;2
42;2561;C808D0;020207;Global irradiance;W/m2;1;0;4
43;2561;C808D0;020607;Total global irradiance;W/m2;1;0;4
44;2561;C808D0;020503;Irradiance sensor temperature;°C;1;0;4
45;2561;C808D0;020303;Ambient temperature;°C;1;0;4
46;2561;C808D0;020403;PV array temperature;°C;1;0;4
47;2561;C808D0;0A0206;Operation Mode;-;1;0;4
48;2561;C808D0;0A2806;Latest Event;-;1;0;4
49;2561;C808D0;1E1405;Hardware Type Id;-;1;0;1
50;2561;C808D0;470107;Nominal AC power;W;1;0;1
51;2561;C808D0;320107;Software version;-;1;0;1
52;2561;C808D0;322807;Software package version;-;1;0;1
53;2561;C808D0;3C0107;Invert Product Number char 8-11;-;1;0;1
```

```
54;2561;C808D0;3C0207;Invert Product Number char 4-7;-;1;0;1
55;2561;C808D0;3C0307;Invert Product Number char 1-3;-;1;0;1
56;2561;C808D0;3C6407;Invert Name char 13-16;-;1;0;1
57;2561;C808D0;3C6507;Invert Name char 9-12;-;1;0;1
58;2561;C808D0;3C6607;Invert Name char 5-8;-;1;0;1
59;2561;C808D0;3C6707;Invert Name char 1-4;-;1;0;1
60;2561;C808D0;460107;Invert Serial Number char 8-11;-;1;0;1
61;2561;C808D0;460207;Invert Serial Number char 4-7;-;1;0;1
62;2561;C808D0;460307;Invert Serial Number char 1-3;-;1;0;1
```

Details of the definition file for a UniLynx inverter:

```
1;2561;C804D0;010207;TotalEnergyProduction;kWh;0.001;0;4
2;2561;C80DD0;022806;PV Voltage input 1;V;0.1;0;2
3;2561;C80DD0;022906;PV Voltage input 2;V;0.1;0;2
4;2561;C80DD0;022A06;PV Voltage input 3;V;0.1;0;2
5;2561;C80DD0;022D06;PV Current input 1;A;0.001;0;2
6;2561;C80DD0;022E06;PV Current input 2;A;0.001;0;2
7;2561;C80DD0;022F06;PV Current input 3;A;0.001;0;2
8;2561;C80DD0;020107;Instant Energy Production;W;1;0;2
9;2561;C80DD0;021406;Grid Voltage;V;1;0;2
10;2561;C80DD0;021506;Grid Current;A;0.001;0;2
11;2561;C80DD0;021606;Grid Frequency;Hz;0.01;0;2
12;2561;C804D0;0A0206;Operation Mode;-;1;0;4
13;2561;C80DD0;0A2806;Latest Event;-;1;0;8
14;2561;C804D0;1E1405;Hardware Type Id;-;1;0;1
15;2561;C80DD0;320107;Software version;-;1;0;1
16;2561;C80DD0;3C0107;Invert Product Number char 8-11;-;1;0;1
17;2561;C80DD0;3C0207;Invert Product Number char 4-7;-;1;0;1
18;2561;C80DD0;3C0307;Invert Product Number char 1-3;-;1;0;1
19;2561;C804D0;3C6407;Invert Name char 13-16;-;1;0;1
20;2561;C804D0;3C6507;Invert Name char 9-12;-;1;0;1
21;2561;C804D0;3C6607;Invert Name char 5-8;-;1;0;1
22;2561;C804D0;3C6707;Invert Name char 1-4;-;1;0;1
23;2561;C80DD0;460107;Invert Serial Number char 8-11;-;1;0;1
24;2561;C80DD0;460207;Invert Serial Number char 4-7;-;1;0;1
25;2561;C80DD0;460307;Invert Serial Number char 1-3;-;1;0;1
```

On the server side, the following columns should be used:

- *Name*: variable name.
- *Units*: variable units.
- *A and B*:
    - The coefficients A and B enable scaling of the collected data item. These coefficients should be applied by the server according to the following method:

Let x be the reported value, and y the converted value:
y=A.x+B

Example:

Scaling the variable “Grid Voltage L1”, No. 14:

14;2561;C808D0;023C06;Grid Voltage L1;V;0.1;0;2

Reported value=2000
Units=V (volts).
Coefficients: A=0.1, B=0
Grid Voltage=(2000 x 0.1) + 0=200 volts.

4 Inverter parameter files

The parameters of the inverters present on the network are sent to the FTP server in two cases:

- During the installation phase triggered by pressing the push-button on the gateway;
- Via a command file of the type GATEWAY: Send inverter parameters (*see chapter on managing command files in the Operating Manual*).

Filename format:

*IDSite*_INV_P _*YYMMDD_hhmmss*.csv.gz

Where: *IDSite*: gateway identifier.

The file format is as follows: (fields in green are optional data that can be enabled or disabled in *IDSite*_daq.ini (*see* section *7.6.2. Format of inverter data* in the User’s Manual)).

```
SNINV;000016U1111;1;
TypeINV;WD0047EC_INV_139F0016016.ini;
 13;49;51;52;53;54;55;56;57;58;59;60;61;62;
11/10/11-15:39:26;8;124;0;808464694;825440582;538976288;825256791;…;538980400;

SNINV;000017U1111;2;
TypeINV;WD0047EC_INV_139F0016016.ini;
 13;49;51;52;53;54;55;56;57;58;59;60;61;62;
11/10/11-15:39:27;8;124;0;808464694;825440582;538976288;825584471;…;538980400;
```

For each inverter, this file details the variables defined as parameters in the file *IDSite*_INV_*family*.ini (see chapter on the format of definition files for inverter families).

In this example, the ellipses (…) correspond to the variables beyond 8 for ease of display.

SNINV = Serial number of inverter n (n=0 to 99).
TypeINV = Family of inverter n.

The column heading "13;49;51;52;53;54;55;56;57;58;59;60;61;62;;" is added if the option (DAQ_HeaderOption) is enabled in *IDSite*_daq.ini.

	To minimise the sizes of transmitted files, the parameter file is compressed in .gz format.

5 Inverter alarm files

An alarm is generated, then transmitted to the remote server in the form of a file on the FTP server (*IDSite*_AL_*YYMMDD_hhmmss*.csv.gz).
The data stored is also uploaded at the same time as an alarm.

Alarm of the INV type:
This type of alarm is uploaded on a change in the status of a variable defined as an alarm in the associated definition file.

Date–Time	Type	Field 1	Field 2	Field 3	Field 4

Where:

Date–Time	Timestamp when alarm triggered, in format YY/MM/DD-hh:mm:ss
Type	INV: Alarm type is Inverter
Field 1	*IDsite*_INV_*type*.ini: Name of reference definition file
Field 2	Serial number of the triggering inverter
Field 3	1 to N: Index of the triggering data item in the associated definition file.
Field 4	Status of the trigger item: 0 to n => Code corresponding to status messages or to messages indicating inverter malfunction.

Example:

11/10/11-15:39:26;INV; WD0047EC_INV_139F0016016.ini; 000016U1111;47;60

Variable "Operation Mode" of inverter 000016U1111 changed to a value of 60.
Please see the manufacturer's documentation for details of any variable.

6 Inverter command files

The ComLynx protocol does not enable modification of the parameters of Danfoss inverters via a command file.