Appendix for Sunny Central inverters

from SMA via Modbus TCP

WebdynSun

The monitoring gateway for your solar installation

CONTENTS

1 Introduction 3
2 Connecting the gateway to the inverters 3
2.1 Topologies of the inverter network 3
2.2 Architecture of the inverter IP network 4
3 Configuring and declaring inverters 5
3.1 Discovering inverters 5
3.2 Manual declaration of inverters 6
3.3 Definition file 7
4 Using inverter data 9
4.1 Data files 9
4.2 Parameter files 10
4.3 Alarm files 10

1 Introduction

This appendix describes all the specific considerations involved in the protocol governing communication with SMA Sunny Central inverters under Modbus TCP. It complements the chapter "Inverter management" of the WebdynSun Operating Manual MU_WebdynSun, available for download from our site http://www.webdynsun.com.

2 Connecting the gateway to the inverters

- All wiring must be carried out only by a specialised qualified electrician.
- Prior to installation, all equipment connected to the corresponding communications bus must be disconnected on both sides (DC and AC).
- Respect all safety recommendations appearing in inverter documentation.

The Modbus-TCP protocol requires that the WebdynSun be linked to the inverter network via a 100 Mbps Ethernet switch or hub. The link to the Ethernet switch is made by connecting an Ethernet RJ45 cable to the LAN port of the unit.

2.1 Topologies of the inverter network

The gateway can handle a maximum of 100 SMA inverters. It does not access the inverters directly, but communicates via an intermediate unit that handles the Modbus TCP. This unit may be either a Sunny Webbox or an SC-COM. The SMA reference document is the one entitled "Interface for Modbus Communication: Sunny Webbox / SC-COM Modbus Interface", and is available for download from the SMA website.

Please refer to this documentation to see how to configure your SMA devices under Modbus TCP before installing the WebdynSun on the Ethernet network.

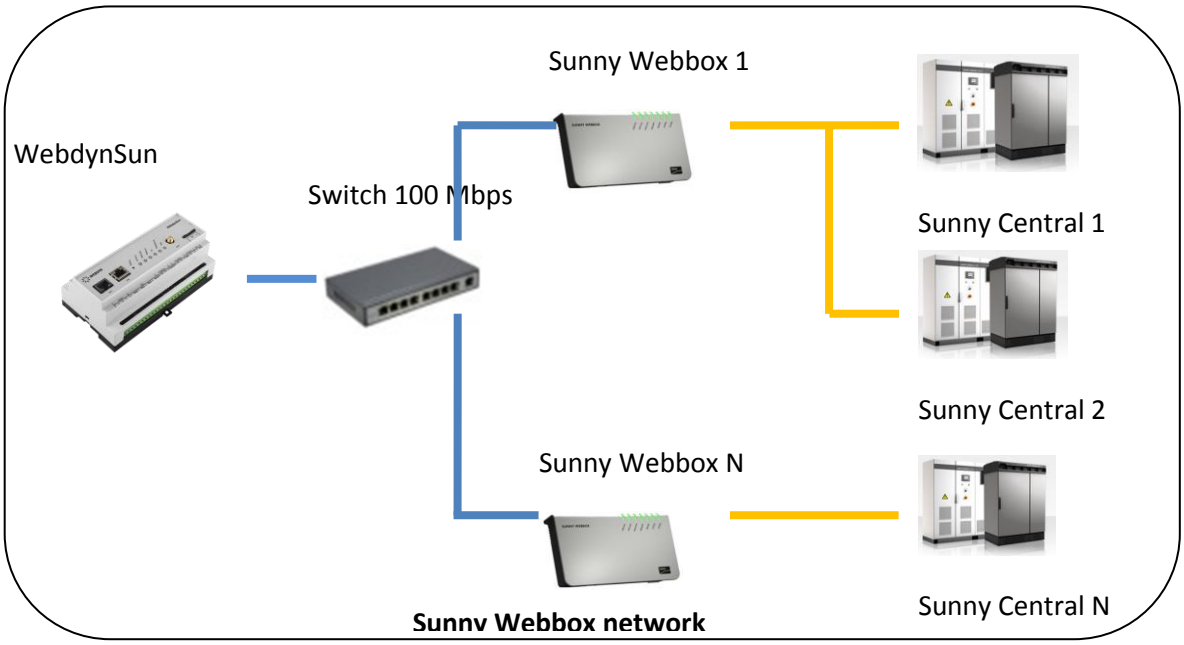

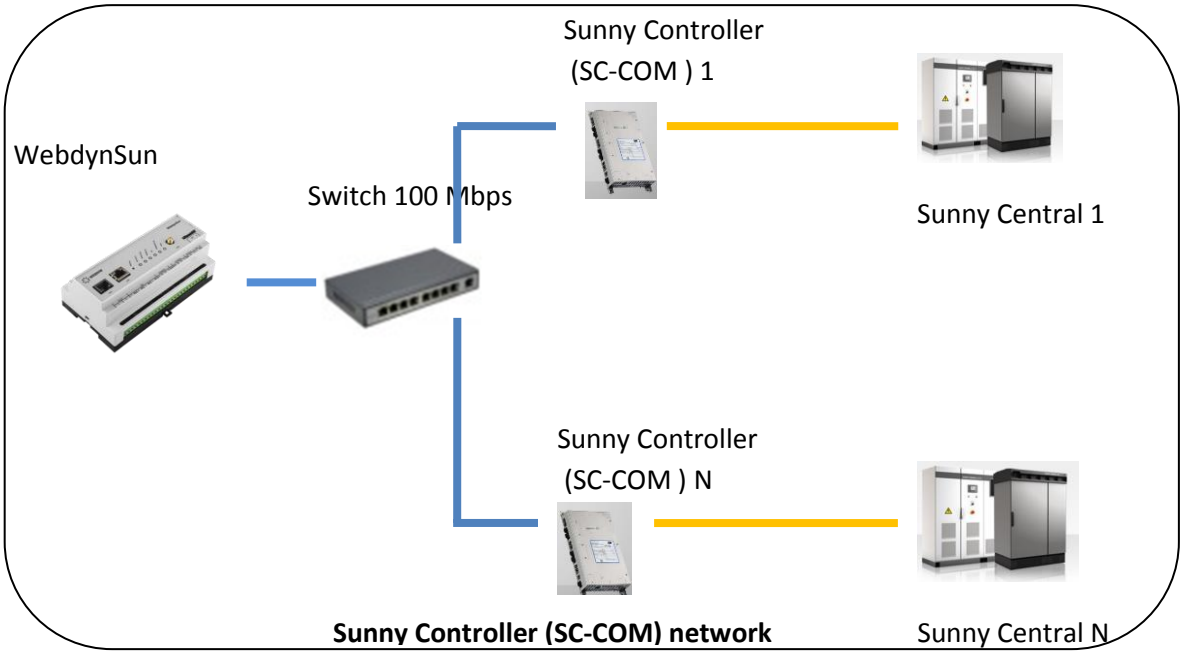

2.2 Architecture of the inverter IP network

As the WebdynSun must be placed in the same IP network as the Sunny Webboxes or SC-COM units, it is essential to know their IP addresses, to be able to access the data from the SMA Sunny Central inverters.

The Modbus TCP interface available on port 502 must be activated on each Sunny Webbox or SC-COM. Please refer to the Sunny Webbox or SC-COM User Manual to see how to configure them.

For a network consisting of Sunny Webboxes, each Sunny Webbox can have several inverters connected to it. These are identified by a unique bus identifier known as the Unit ID (3 to 247).

For a network of Sunny Controllers (SC-COM), there is only one inverter for each SC-COM. The Unit ID generally used for the inverter is 3.

Unit IDs 1 and 2 are reserved by SMA to identify the Sunny Webbox or the SC-COM. Unit ID 1 gives access to the list of devices managed by the Sunny Webbox or the SC-COM. Unit ID 2 gives access to generic information about the photovoltaic installation such as the instantaneous power (Pac) and the total energy produced (E-total) by the installation.

In the interests of convenience, and as far as possible, it is desirable to use a Class C IP configuration with a subnet mask equal to 255.255.255.0. This enables the WebdynSun to discover all the devices connected, on demand.

Example:

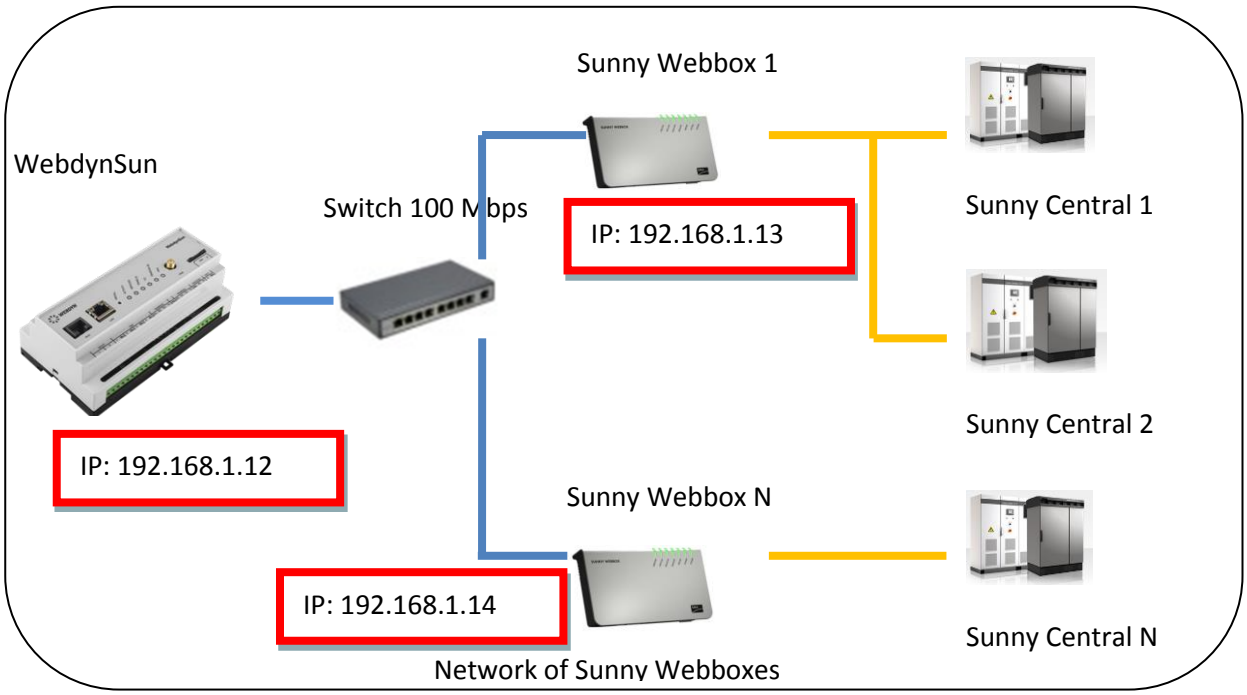

3 Configuring and declaring inverters

Check that the parameter "INV_Type" in the configuration file *prefixID*_config.ini is correctly set before carrying out any configuration operations involving the inverters. It should have the value 12, to select the "SMA Sunny Central - Modbus TCP" inverter protocol.

3.1 Discovering inverters

Inverter discovery is possible using the SMA Sunny Central - Modbus TCP protocol on condition that the Sunny Webboxes have contiguous IP addresses and the inverters have contiguous Unit IDs. It is performed via the built-in Web server on the WebdynSun, or using a command file. See the WebdynSun Operating Manual for further details.

The WebdynSun will create a specific definition file depending on the Unit ID of the device discovered:

- Unit ID 1: SC_GATEWAY.
- Unit ID 2: SC_PLANT_PARAMETERS.
- Unit ID 3 to 247: SC_DEVICE.

The *prefixID*_INV.ini and *prefixID*_daq.ini files, and the definition files for the devices discovered will be uploaded to the remote server at the next FTP connection, on condition that they are not already present on the server.

If inverter discovery does not work, the inverters must be declared manually as shown in the following section.

3.2 Manual declaration of inverters

Manual declaration of the inverters is carried out via the configuration file *prefixID*_daq.ini. To do this, you must first obtain the following information:

- IP address of each Sunny Webbox or SC-COM;
- Serial numbers of the inverters connected;
- Bus identifier (Unit ID) of each inverter.

This information must be placed in the file *prefixID*_daq.ini as shown below:

```
INV_SN[index]=InverterSerialNumber
INV_FileDefName[index]=prefixID_INV_SC_DEVICE.ini
INV_INFO[index]=IPAddress:502:InverterUnitID
```

Where:

Index: Index of the INV device declared (0 to 99).
InverterSerialNumber: Serial number of the Sunny Central inverter
IPAddress: IP address of the Sunny Webbox to which the inverter is connected.
InverterUnitID: Bus identifier (Unit ID) of each inverter (3 to 247)

Example:

```
INV_SN[0]=180210101
INV_FileDefName[0]=prefixID_INV_SC_DEVICE.ini
INV_INFO[0]=10.113.1.1:502:3
INV_SN[1]=180210108
INV_FileDefName[1]=prefixID_INV_SC_DEVICE.ini
INV_INFO[1]=10.113.1.2:502:3
INV_SN[2]=180210044
INV_FileDefName[2]= prefixID_INV_SC_DEVICE.ini
INV_INFO[2]=10.113.1.3:502:3
INV_SN[3]=180210078
INV_FileDefName[3]= prefixID_INV_SC_DEVICE.ini
INV_INFO[3]=10.113.1.3:502:4
```

On its next connection, the gateway will download its *prefixID*_daq.ini and *prefixID*_INV_SC_DEVICE.ini files and begin collecting data.

3.3 Definition file

There are three types of definition file to represent SMA Sunny Central devices:

- *prefixID*_INV_SC_GATEWAY.ini: Defines the set of parameters and variables accessible on Unit ID 1.
- *prefixID*_INV_SC_PLANT_PARAMETERS.ini: Defines the set of parameters and variables accessible on Unit ID 2.
- *prefixID*_INV_SC_DEVICE.ini: Defines the set of parameters and variables accessible on Unit IDs 3 to 247.

These files are generated automatically by the WebdynSun during the inverter discovery process. They are uploaded by the gateway to the remote FTP server at the following connection to the server. They can be modified by the user as required.

Every parameter or variable to be collected is defined in the definition file in accordance with the following format:

index;reserved(*);*requestType*(*);*modbusRegister*(*);*name*;*unit*;*coefA*;*coefB*;*action*

Where:

index: Index of the variable to be collected.
reserved: Reserved for future use.
requestType: Type of Modbus-TCP request, format of the Modbus variable to be collected.
modbusRegister: Address of the Modbus register.
name: Name of the variable to be captured.
unit: Units of the variable to be captured.
coefA and coefB: Scaling coefficients
action: Action to be performed on the variable

- ***0***: Variable not collected.
- ***1***: Variable treated as read-only parameter.
- ***2***: Min/max/avg values.
- ***4***: Instantaneous value.
- ***8***: Variable treated as an alarm.

(*) Parameter not user modifiable

The files generated by default are:

***prefixID*_INV_SC_GATEWAY.ini**

```
1;0;00033301;7569;Serial Number;-;1;0;4
2;0;00032301;A47D;Device ID 1;-;1;0;1
3;0;00033301;A47E;Device SN 1;-;1;0;1
4;0;00032301;A480;Device UID 1;-;1;01
5;0;00032301;A481;Device ID 2;-;1;0;1
6;0;00033301;A482;Device SN 2;-;1;0;1
7;0;00032301;A484;Device UID 2;-;1;0;1
8;0;00032301;A485;Device ID 3;-;1;0;1
9;0;00033301;A486;Device SN 3;-;1;0;1
10;0;00032301;A488;Device UID 3;-;1;0;1
…
740;0;00032301;A858;Device ID 247;-;1;0;1
741;0;00033301;A859;Device SN 247;-;1;0;1
742;0;00032301;A86B;Device UID 247;-;1;0;1
```

***prefixID*_INV_SC_PLANT_PARAMETERS.ini**

```
1;0;00033301;7569;Serial Number;-;1;0;4
2;0;00033301;7537;Modbus counter;-;1;0;4
3;0;00033301;75F1;SerTem;UTC;1;0;1
4;0;00033301;75F3;TmZn;UTC;1;0;1
5;0;00034301;7731;E-total;Wh;1;0;4
6;0;00034301;7735;E-today;Wh;1;0;4
7;0;00033101;7837;Pac;W;1;0;4
```

***prefixID_* INV_SC_DEVICE.ini**

```
1;0;00033301;7569;Serial Number;-;1;0;4
2;0;00033301;75F1;SerTem;UTC;1;0;4
3;0;00033301;7611;Riso;ohms;1;0;4
4;0;00033301;7621;Mode;-;1;0;4
5;0;00033301;7623;Error;-;1;0;8
6;0;00034301;7731;E-Total;Wh;1;0;4
7;0;00034301;7735;E-today;Wh-;1;0;4
8;0;00034301;7739;h-On;s;1;0;4
9;0;00034301;773D;h-total;s;1;0;4
10;0;00033101;7831;Ipv;A;0.001;0;4
11;0;00033101;7833;Vpv;V;0.01;0;4
12;0;00033101;7835;Ppv;W;1;0;4
13;0;00033101;7837;Pac;W;1;0;4
14;0;00033301;7845;VacL12;V;0.01;0;4
15;0;00033301;7847;VacL23;V;0.01;0;4
16;0;00033301;7849;VacL31;V;0.01;0;4
17;0;00033301;784B;Iac;A;0.001;0;4
18;0;00033301;7853;Fac;Hz;0.01;0;4
19;0;00033101;7855;Qac;VAr;0.01;0;4
20;0;00033101;785D;Sac;VA;1;0;4
21;0;00033301;7865;PF;-;1;0;4
22;0;00033301;7869;Q-VArMod;-;1;0;4
23;0;00033101;786B;Q-VAr;VAr;1;0;4
24;0;00033301;7871;PF-PFExt;-;1;0;4
25;0;00033301;7873;P-WMod;-;1;0;4
26;0;00033301;7875;P-W;W;1;0;4
27;0;00033101;853D;TmpHs;°F;0.1;0;4
28;0;00033101;8541;TmpCab;°F;0.1;0;4
29;0;00033101;854D;TmpEx;°F;0.1;0;4
```

As these files list the whole set of Modbus registers defined in the SMA document *"Interface for Modbus-Communication: SUNNY WEBBOX / SC-COM Modbus Interface",* please see that document for further details of the variables captured.

4 Using inverter data

4.1 Data files

SMA Sunny Central inverter data files comply with the format described in the WebdynSun Operating Manual.

4.2 Parameter files

SMA Sunny Central parameter files comply with the format described in the WebdynSun Operating Manual.

4.3 Alarm files

SMA Sunny Central alarm files comply with the format described in the WebdynSun Operating Manual.

Mechanism for censoring alarms

For status variables configured as alarms, it is possible to specify, in the definition file, which values are to be censored, i.e. for which an alarm report should not be uploaded, even though the action code is 8.

This mechanism means that an alarm is not uploaded if the value taken by a variable with an action code of 8 has been declared in the list of values to be ignored.

The list of values to be ignored is specific to each variable declared in the definition file with the action code Alarm (8), and is written in the field following that containing the Alarm action code.

The values to be censored are separated by the pipe symbol "|".