# Appendix for Socomec Sunsys Home Inverters

# Interface RS485

## WebdynSun

The monitoring gateway for your solar installation

# CONTENTS

1 Introduction ..... 3
2 Connecting the gateway to the inverters ..... 3
2.1 Activating/deactivating the bus terminator plug: ..... 3
2.2 Connecting inverters to the RS485 bus: ..... 4
3 Configuring and declaring inverters ..... 5
3.1 Discovering inverters ..... 5
3.2 Declaring inverters ..... 6
3.3 Definition files ..... 6
3.4 Data files ..... 9
3.5 Parameter files ..... 9
3.6 Alarm files ..... 9
4 List of supported devices ..... 9

# 1 Introduction

This appendix describes all the specific considerations involved in the protocol governing communication with Socomec Sunsys Home inverters over RS485. It complements the chapter "Inverter management" of the WebdynSun Operating Manual MU_WebdynSun, available for download from our site http://www.webdynsun.com.

# 2 Connecting the gateway to the inverters

- All wiring must be carried out only by a specialised qualified electrician.
- Prior to installation, all equipment connected to the corresponding communications bus must be disconnected on both sides (DC and AC).
- Respect all safety recommendations appearing in inverter documentation.

Communication with the inverters is via a 2-wire RS485 bus in Half-Duplex mode. This is achieved through the use of the RS485(A) port on the WebdynSun, which is dedicated to inverters.

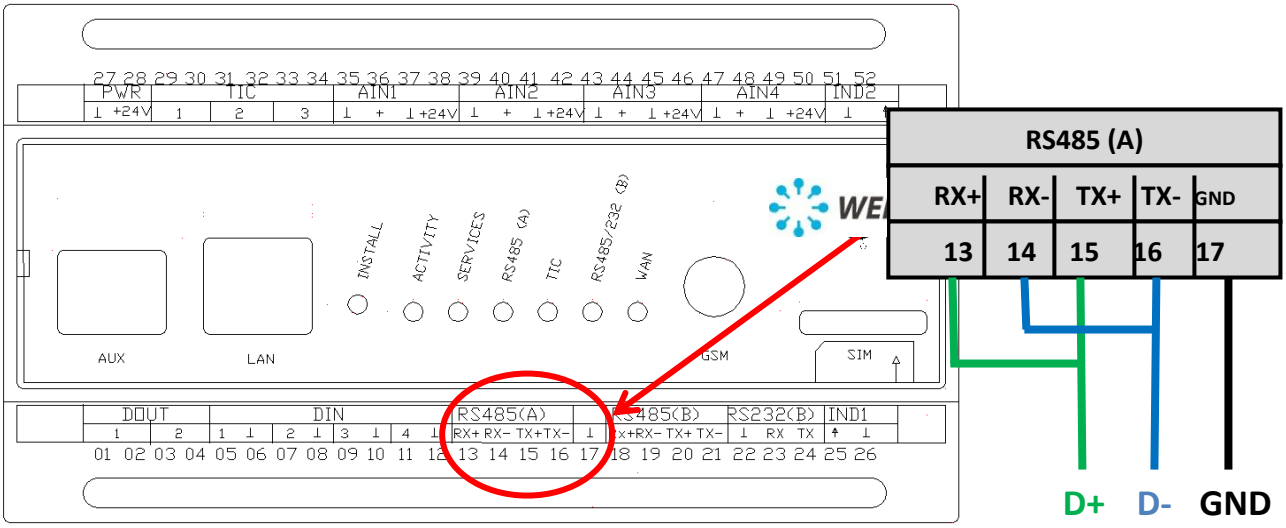


The WebdynSun can handle up to 100 inverters.

## 2.1 Activating/deactivating the bus terminator plug

The gateway may be located at the end of the RS485 communications bus or in the middle of the bus.

To ensure correct operation of the RS485 data bus, it must be fitted with a 120 ohm termination plug at both ends. Depending on the position of the gateway on the bus, this plug must be enabled or disabled via a pair of jumpers mounted inside the casing.

Before installing the WebdynSun unit, check that the bus terminator jumpers are correctly positioned.

> By default, the gateway is configured to be located at the end of a 4-wire RS485 bus. Consequently, the jumpers are plugged into the "Activation" position of the 120 ohm terminator plug.
> As the Socomec bus has 2 wires, jumper JMP3 must be removed.

Only jumper JMP2 inside the casing must be positioned to activate the 120 ohm bus termination plug.

The terminator plug must be activated where the gateway is placed at the end of the RS485 bus, and deactivated where it is in the middle of the bus.

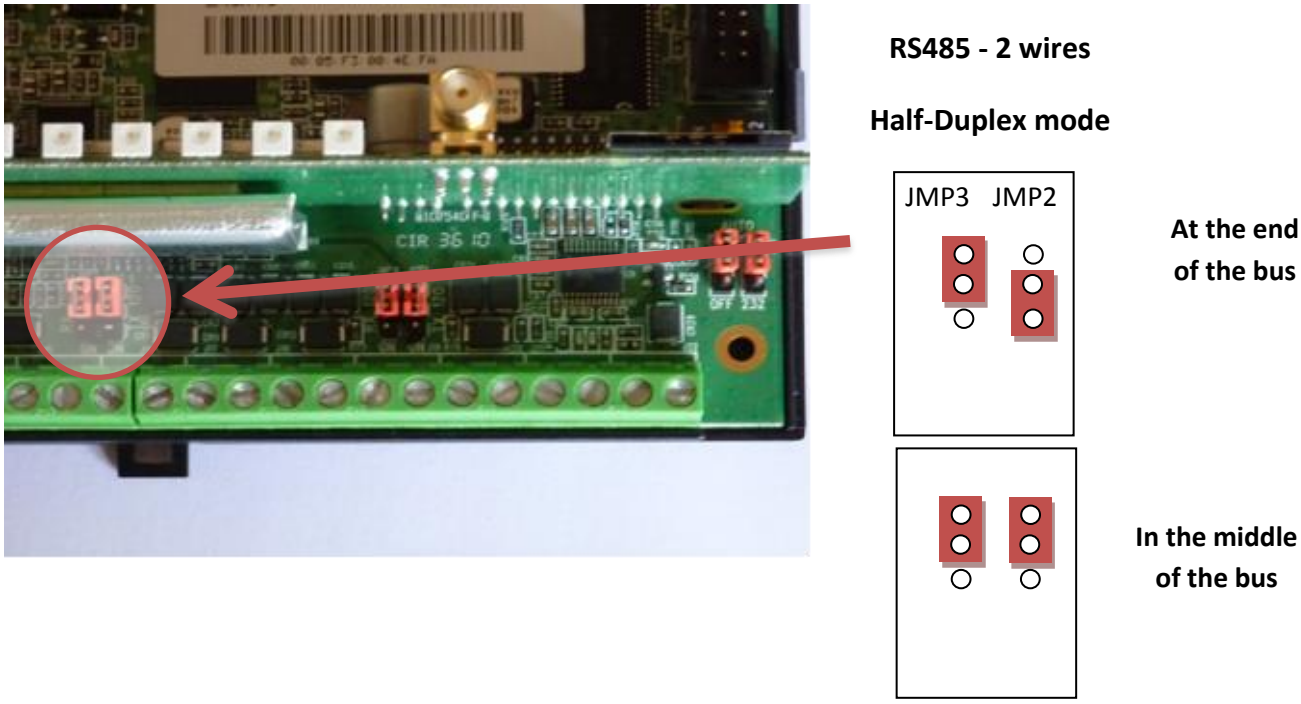


## 2.2 Connecting inverters to the RS485 bus

Consult the inverter documentation regarding the principles governing RS485 connection and wiring. Once the RS485 cable has been brought up to the gateway:

1. Strip around 4 cm of the outer sheath from the RS485 communications cable.
2. Trim the shielding back to match the cable sheath.
3. Bare around 6 mm of the wires.
4. Connect the conductors to the connector marked RS485(A), respecting the allocations in your RS485 communications bus.

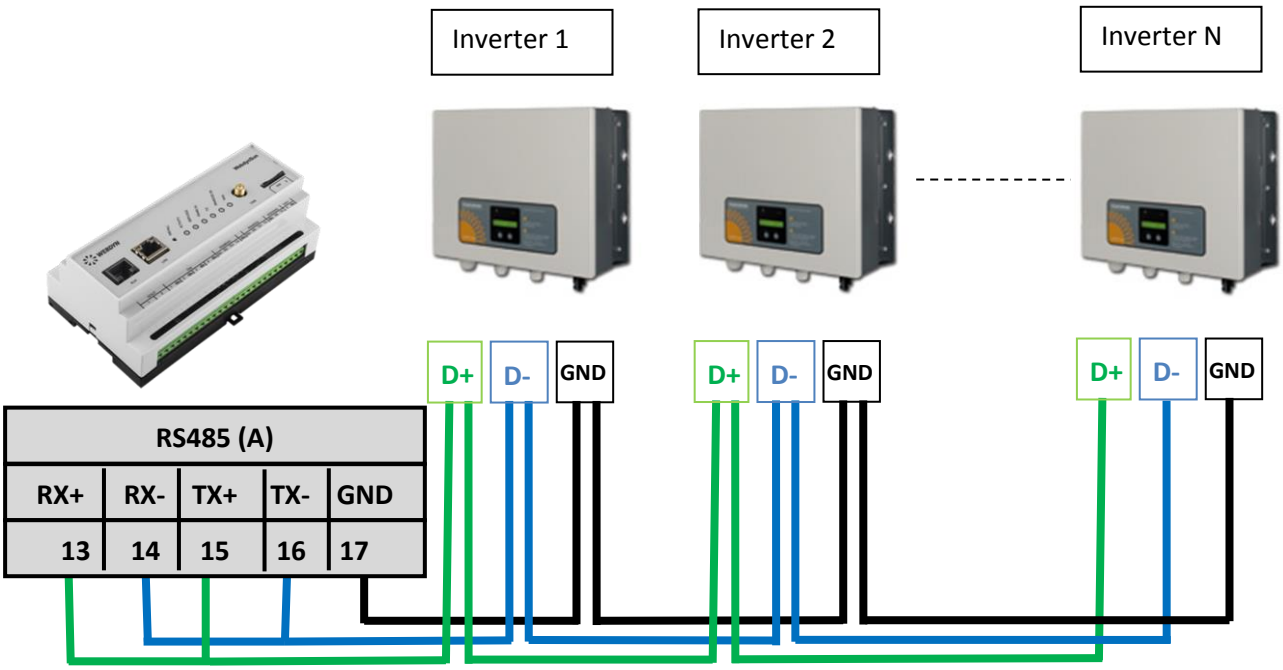


# 3 Configuring and declaring inverters

Check that the parameter "INV_Type" in the configuration file *prefixID*_config.ini is correctly set before performing any configuration on the inverters. It should have the value 13 to select the inverter protocol "Socomec – Sunsys Home".

| | |
|---|---|
| ⚠ | Each inverter must be configured manually with a unique RS485 address. Please see the manufacturer's documentation for the configuration method. |

## 3.1 Discovering inverters

Inverter discovery is possible under the SunsysHome protocol on condition that the inverters have been configured beforehand with a unique RS485 address on the bus.

During discovery of Socomec devices, the WebdynSun creates specific definition files for each inverter family. The rule for naming these files is: *prefixID*_INV_*productNumber*.ini, where *productNumber* corresponds to the inverter type.

The files *prefixID*_INV.ini, *prefixID*_daq.ini, and the definition files for the devices discovered will be uploaded to the remote server on the next FTP connection, unless they are already present on the server.

## 3.2 Declaring inverters

Inverters are declared via the configuration file *prefixID*_daq.ini. This file is automatically generated after the launch of the inverter discovery process.

The file *prefixID*_daq.ini should contain the information described below:

| |
|---|
| INV_SN[*index*]=*productNumber_version_address*<br>INV_FileDefName[*index*]=*prefixID*_INV_*productNumber*.ini |

Where:

| |
|---|
| **index**: Index of the INV unit declared (0 to 99).<br>**productNumber**: Device type<br>**version**: Version number of the device<br>**address**: x (1 to 100), unique network address |

Example:

| |
|---|
| INV_SN[0]=3600_1100_1<br>INV_FileDefName[0]=*prefixID*_INV_3600.ini |

| | |
|---|---|
| ⚠ | The gateway will not begin to collect data as long as the *prefixID*_daq.ini and the generated definition files are not present on the remote FTP server. |

## 3.3 Definition files

Each inverter is characterised by its definition file. These files are generated automatically by the WebdynSun during inverter discovery. They are uploaded to the remote FTP server by the gateway on its next connection. The files may be modified by the user as required.

Every parameter or variable to be collected is defined in the definition file, according to the following format:

| |
|---|
| index;reserved(*);requestFormat(*);registerAddress(*);name;unit;coefA;coefB;action |

**(*)**Parameter not user modifiable

Where:

**index**: Index of the variable to be collected.
**reserved**: Port used for the inverter request.
**requestFormat**: Format of the variable collection request.
**registerAddress**: Address of the variable to be collected.
**name**: Name of the variable to be collected.
**unit:** Units of the variable to be collected.
**coefA and coefB**: Scaling coefficients.
**action**: Action to be performed on the variable.

***0:*** Variable not collected
***1:*** Variable treated as read-only parameter.
***2***: Min/max/avg values.
***4***: Instantaneous value.
***8***: Variable treated as an alarm.

For the definitions of the variables, please consult the inverter documentation.

Depending on the variable type, several actions are applicable:

| Variable type | Variable format | Possible actions |
|---|---|---|
| Instantaneous variables | Numerical | 0, 4 |
| | Counter | 0, 4 |
| | Analogue | 0, 2, 4 |
| | Status | 0, 4, 8 |
| Parameters | | 0, 1 |

**N.B.** If the action defined is not consistent with the variable type, it is ignored.

The file generated by default is:

```
1;0;00042301;0404;Firmware Version Number;-;1;0;1
2;0;00042301;0405;Inverter VA Model;-;1;0;1
3;0;00042301;0406;Cumulative Energy Today;Whr;1;0;4
4;0;00043301;0407;Today Online Time;s;1;0;4
5;0;00043301;0409;LifeTime Energy;Whr;1;0;4
6;0;00042301;040B;D2D-1 Dc Voltage;V;0.1;0;4
7;0;00042301;040C;D2D-1 Dc Current;A;0.1;0;4
8;0;00042301;040D;D2D-1 Dc Wattage;W;1;0;4
9;0;00042301;040E;D2D-2 Dc Voltage;V;0.1;0;4
10;0;00042301;040F;D2D-2 Dc Current;A;0.1;0;4
11;0;00042301;0410;D2D-2 Dc Wattage;W;1;0;4
12;0;00042301;0413;Inverter Model;-;1;0;1
13;0;00042301;0414;AC Voltage;V;0.1;0;4
14;0;00042301;0415;AC Frequency;Hz;0.1;0;4
15;0;00042301;0416;Reconnecting Time;s;1;0;4
16;0;00042301;0417;Inverter Current;A;0.1;0;4
17;0;00042301;0418;Inverter Wattage;W;1;0;4
18;0;00042301;0419;Inverter Amb. Temperature;°C;1;0;4
19;0;00042301;041D;EventList01;-;1;0;4
20;0;00042301;041E;EventList02;-;1;0;4
21;0;00042301;041F;EventList03;-;1;0;4
22;0;00042301;0420;EventList04;-;1;0;4
23;0;00042301;0421;EventList05;-;1;0;4
24;0;00042301;0422;EventList06;-;1;0;4
25;0;00042301;0423;EventList07;-;1;0;4
26;0;00042301;0424;EventList08;-;1;0;4
27;0;00042301;0425;EventList09;-;1;0;4
28;0;00042301;0426;EventList10;-;1;0;4
29;0;00042301;0428;D2D-1 Version ;-;1;0;1
30;0;00042301;042B;D2D-2 Version;-;1;0;1
31;0;00042301;0435;D2D-1 Cumulative Energy Today;Whr;1;0;4
32;0;00042301;0436;D2D-2 Cumulative Energy Today;Whr;1;0;4
33;0;00043301;0438;D2D-1 LifeTime Energy;Whr;1;0;4
34;0;00043301;043A;D2D-2 LifeTime Energy;Whr;1;0;4
35;0;00042301;03FF;Status Register 1;-;1;0;8
36;0;00042301;0400;Status Register 2;-;1;0;8
```

### 3.4 Data files

Socomec inverter data files comply with the format described in the WebdynSun Operating Manual.

### 3.5 Parameter files

Socomec inverter parameter files comply with the format described in the WebdynSun Operating Manual.

### 3.6 Alarm files

All variables defined with an Action field of 8 in the definition file generate an alarm when they change status.

**Mechanism for censoring alarms**

For status variables configured as alarms, it is possible to specify, in the definition file, which values are to be censored, i.e. for which an alarm report should not be uploaded, even though the action code is 8.

This mechanism means that an alarm is not uploaded if the value taken by a variable with an action code of 8 has been declared in the list of values to be ignored.

The list of values to be ignored is specific to each variable declared in the definition file with the action code Alarm (8), and is written in the field following that containing the Alarm action code.

The values to be censored are separated by the pipe symbol "|".

## 4 List of supported devices

All Socomec inverters from the "Sunsys Home" range with a 2-wire RS485 interface are handled by the WebdynSun.