Appendix for Socomec Sunsys Pro Inverters

Interface RS485

WebdynSun

The monitoring gateway for your solar installation

CONTENTS

1 Introduction 3
2 Connecting the gateway to the inverters 3
2.1 Activating/deactivating the bus terminator plug: 3
2.2 Connecting inverters to the RS485 bus: 4
3 Configuring and declaring inverters 5
3.1 Discovering inverters 5
3.2 Declaring inverters 6
3.3 Definition files 6
3.4 Data files 9
3.5 Parameter files 9
3.6 Alarm files 9
4 List of supported devices 12

1 Introduction

This appendix describes all the specific considerations involved in the protocol governing communication with Socomec Sunsys Pro inverters over RS485. It complements the chapter "Inverter management" of the WebdynSun Operating Manual MU_WebdynSun, available for download from our site http://www.webdynsun.com.

2 Connecting the gateway to the inverters

- All wiring must be carried out only by a specialised qualified electrician.
- Prior to installation, all equipment connected to the corresponding communications bus must be disconnected on both sides (DC and AC).
- Respect all safety recommendations appearing in inverter documentation.

Communication with the inverters is via a 2-wire RS485 bus in Half-Duplex mode. This is achieved through the use of the RS485(A) port on the WebdynSun, which is dedicated to inverters.

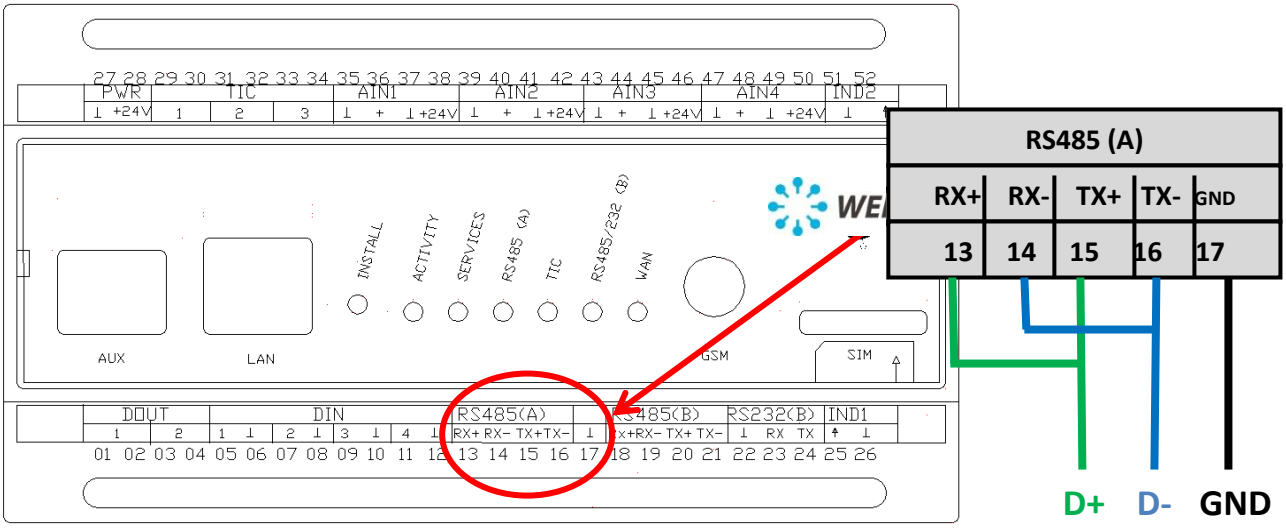

The WebdynSun can handle up to 100 inverters.

2.1 Activating/deactivating the bus terminator plug

The gateway may be located at the end of the RS485 communications bus or in the middle of the bus.

To ensure correct operation of the RS485 data bus, it must be fitted with a 120 ohm termination plug at both ends. Depending on the position of the gateway on the bus, this plug must be enabled or disabled via a pair of jumpers mounted inside the casing.

Before installing the WebdynSun unit, check that the bus terminator jumpers are correctly positioned.

> By default, the gateway is configured to be located at the end of a 4-wire RS485 bus. Consequently, the jumpers are plugged into the "Activation" position of the 120 ohm terminator plug.
> As the Socomec bus has 2 wires, jumper JMP3 must be removed.

Only jumper JMP2 inside the casing must be positioned to activate the 120 ohm bus termination plug.

The terminator plug must be activated where the gateway is placed at the end of the RS485 bus, and deactivated where it is in the middle of the bus.

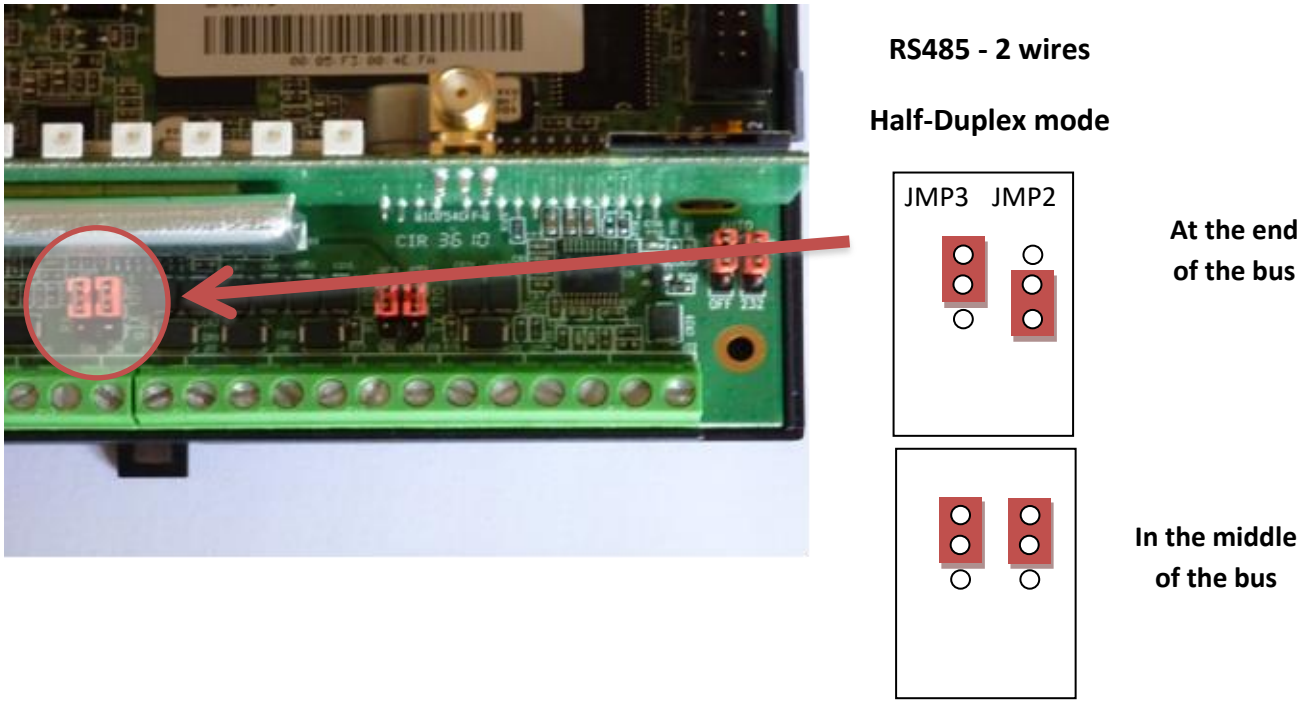

2.2 Connecting inverters to the RS485 bus

Consult the inverter documentation regarding the principles governing RS485 connection and wiring. Once the RS485 cable has been brought up to the gateway:

1. Strip around 4 cm of the outer sheath from the RS485 communications cable.
2. Trim the shielding back to match the cable sheath.
3. Bare around 6 mm of the wires.
4. Connect the conductors to the connector marked RS485(A), respecting the allocations in your RS485 communications bus.

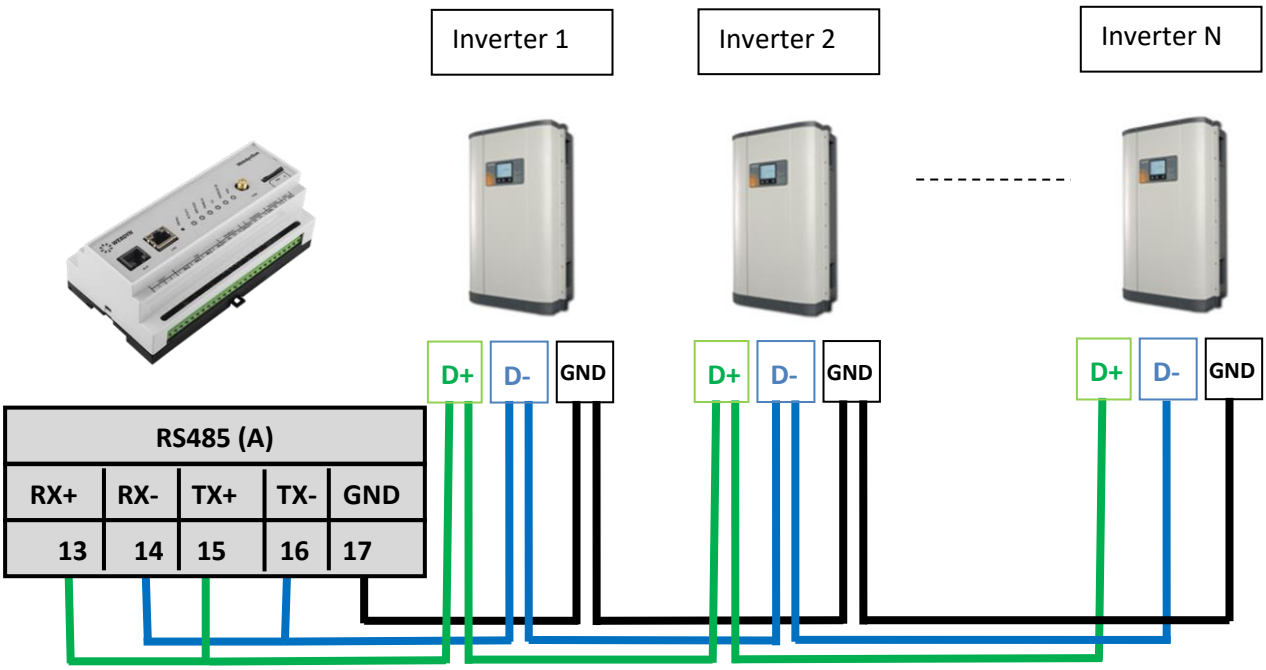

Pinout for the RJ45 connector on the RS485 link to the inverters:

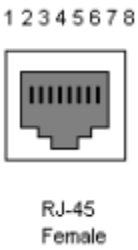

Pin	Function
1	-
2	-
3	-
4	D- / RS485 Data -
5	D+ / RS485 Data +
6	-
7	GND
8	VCC 12V

3 Configuring and declaring inverters

Check that the parameter “INV_Type” in the configuration file *prefixID*_config.ini is correctly set before performing any configuration on the inverters. It should have the value 14 to select the inverter protocol “Socomec – SunsysPro”.

Each inverter must be configured manually with a unique network address, and have the Ethernet mode disabled. Please see the manufacturer’s documentation for an explanation of this configuration process.

3.1 Discovering inverters

Inverter discovery is possible via the SunsysPro protocol, on condition that the inverters have already been configured with a unique RS485 address on the bus.

During discovery of Socomec devices, the WebdynSun creates specific definition files for each inverter family. The rule for naming these files is: *prefixID*_INV_*productNumber*.ini, where *productNumber* corresponds to the inverter type.

The files *prefixID*_INV.ini, *prefixID*_daq.ini, and the definition files for the devices discovered will be uploaded to the remote server on the next FTP connection, unless they are already present on the server.

3.2 Declaring inverters

Inverters are declared via the configuration file *prefixID*_daq.ini. This file is automatically generated after the launch of the inverter discovery process.

The file *prefixID*_daq.ini should contain the information described below:

INV_SN[*index*]=*serialNumber*
INV_FileDefName[*index*]=*prefixID*_INV_SUNSYS_PRO.ini

Where:

index: Index of the INV unit declared (0 to 99).
serialNumber: Serial number of the inverter detected

Example:

INV_SN[0]=WE10450579
INV_FileDefName[0]=*prefixID*_INV_SUNSYS_PRO.ini

The gateway will not begin to collect data as long as the *prefixID*_daq.ini and the generated definition files are not present on the remote FTP server.

3.3 Definition files

Each inverter is characterised by its definition file. These files are generated automatically by the WebdynSun during inverter discovery. They are uploaded to the remote FTP server by the gateway on its next connection. The files may be modified by the user as required.

Every parameter or variable to be collected is defined in the definition file, according to the following format:

index;reserved(*);requestFormat(*);registerAddress(*);name;unit;coefA;coefB;action

(*)Parameter not user modifiable

Where:

index: Index of the variable to be collected.
reserved: Port used for the inverter request.
requestFormat: Format of the variable collection request.
registerAddress: Address of the variable to be collected.
name: Name of the variable to be collected.
unit: Units of the variable to be collected.
coefA and coefB: Scaling coefficients.
action: Action to be performed on the variable.

- ***0:*** Variable not collected
- ***1:*** Variable treated as read-only parameter.
- ***2***: Min/max/avg values.
- ***4***: Instantaneous value.
- ***8***: Variable treated as an alarm.

For the definitions of the variables, please consult the inverter documentation.

Depending on the variable type, several actions are applicable:

Variable type	Variable format	Possible actions
Instantaneous variables	Numerical	0, 4
	Counter	0, 4
	Analogue	0, 2, 4
	Status	0, 4, 8
Parameters		0, 1

N.B. If the action defined is not consistent with the variable type, it is ignored.

The file generated by default is:

```
1;0;00042301;040F;DSP FW rev;-;0.1;0;1
2;0;00042301;0410;DSP FW date;-;0.1;0;1
3;0;00042301;0411;Redundant FW rev;-;0.1;0;1
4;0;00042301;0412;Redundant FW date;-;0.1;0;1
5;0;00042301;0413;Display FW rev;-;0.1;0;1
6;0;00042301;0414;Display FW date;-;0.1;0;1
7;0;00042301;0417;Status;-;0.1;0;4
8;0;00042301;0418;Reconnected time;s;0.1;0;4
9;0;00042301;0424;Percentage;%;1;0;4
10;204544;00042301;0420;AC output A-Voltage;V;0.1;0;4
11;204544;00042301;0421;AC output A-Current;A;0.01;0;4
12;204544;00042301;0422;AC output A-Wattage;W;1;0;4
13;204544;00042301;0423;AC output A-Frequency;Hz;0.01;0;4
14;204544;00042301;0425;AC output A-Redundant Voltage;V;0.1;0;4
15;204544;00042301;0426;AC output A-Redundant Frequency;Hz;0.01;0;4
16;204544;00042301;042B;AC output A-Adc Voltage;-;1;0;4
```

```
17;204544;00042301;042C;AC output A-Adc Current;-;1;0;4
18;204544;00042301;042D;AC output A-Adc Wattage;-;1;0;4
19;204544;00042301;042E;AC output A-Adc Frequency;-;1;0;4
20;204545;00042301;0420;AC output B-Voltage;V;0.1;0;4
21;204545;00042301;0421;AC output B-Current;A;0.01;0;4
22;204545;00042301;0422;AC output B-Wattage;W;1;0;4
23;204545;00042301;0423;AC output B-Frequency;Hz;0.01;0;4
24;204545;00042301;0425;AC output B-Redundant Voltage;V;0.1;0;4
25;204545;00042301;0426;AC output B-Redundant Frequency;Hz;0.01;0;4
26;204545;00042301;042B;AC output B-Adc Voltage;-;1;0;4
27;204545;00042301;042C;AC output B-Adc Current;-;1;0;4
28;204545;00042301;042D;AC output B-Adc Wattage;-;1;0;4
29;204545;00042301;042E;AC output B-Adc Frequency;-;1;0;4
30;204546;00042301;0420;AC output C-Voltage;V;0.1;0;4
31;204546;00042301;0421;AC output C-Current;A;0.01;0;4
32;204546;00042301;0422;AC output C-Wattage;W;1;0;4
33;204546;00042301;0423;AC output C-Frequency;Hz;0.01;0;4
34;204546;00042301;0425;AC output C-Redundant Voltage;V;0.1;0;4
35;204546;00042301;0426;AC output C-Redundant Frequency;Hz;0.01;0;4
36;204546;00042301;042B;AC output C-Adc Voltage;-;1;0;4
37;204546;00042301;042C;AC output C-Adc Current;-;1;0;4
38;204546;00042301;042D;AC output C-Adc Wattage;-;1;0;4
39;204546;00042301;042E;AC output C-Adc Frequency;-;1;0;4
40;204592;00042301;0420;DC Input 1-Voltage;V;0.1;0;4
41;204592;00042301;0421;DC Input 1-Current;A;0.01;0;4
42;204592;00042301;0422;DC Input 1 -Wattage;W;1;0;4
43;204592;00042301;042B;DC Input 1-Adc Voltage;-;1;0;4
44;204592;00042301;042C;DC Input 1-Adc Current;-;1;0;4
45;204592;00042301;042D;DC Input 1 Adc Wattage;-;1;0;4
46;204593;00042301;0420;DC Input 2-Voltage;V;0.1;0;4
47;204593;00042301;0421;DC Input 2-Current;A;0.01;0;4
48;204593;00042301;0422;DC Input 2 -Wattage;W;1;0;4
49;204593;00042301;042C;DC Input 2-Adc Voltage;-;1;0;4
50;204593;00042301;042D;DC Input 2-Adc Current;-;1;0;4
51;204593;00042301;042E;DC Input 2 Adc Wattage;-;1;0;4
52;0;00043501;042F;Today Energy;Wh;0.1;0;4
53;0;00043501;0431;Today Runtime;s;1;0;4
54;0;00043501;0433;Total Energy;Wh;0.1;0;4
55;0;00043501;0435;Total Runtime;s;1;0;4
56;0;00042301;0437;Max Ambient Temperature;°C;1;0;4
57;0;00042301;0438;Max HS1 Temperature;°C;1;0;4
58;0;00042301;0439;Max HS2 Temperature;°C;1;0;4
59;0;00042301;043A;Max HS3 Temperature;°C;1;0;4
60;0;00042301;0BFF;Error0;-;1;0;8
61;0;00042301;0C00;Error1;-;1;0;8
```

```
62;0;00042301;0C0F;Warning0;-;1;0;8
63;0;00042301;0C1F;Fault0;-;1;0;8
64;0;00042301;0C20;Fault1;-;1;0;8
65;0;00042301;0C21;Fault2;-;1;0;8
66;0;00042301;0C22;Fault3;-;1;0;8
67;0;00042301;0C23;Fault4;-;1;0;8
```

Please see the manufacturer's documentation for further details of the variables available.

3.4 Data files

Socomec inverter data files comply with the format described in the WebdynSun Operating Manual.

3.5 Parameter files

Socomec inverter parameter files comply with the format described in the WebdynSun Operating Manual.

3.6 Alarm files

All variables defined with an Action field of 8 in the definition file generate an alarm when they change status.

The variables "Error0", "Error1", "Warning0", "Fault0", "Fault1", "Fault2", "Fault3" and "Fault4" are expressed in 16-bit fields according to the table below:

Variable	Error code bit fields
Error0	E15~E00
Error1	E31~E16
Warning0	W15~W00
Fault0	F15~F00
Fault1	F31~F16
Fault2	F47~F32
Fault3	F63~F48
Fault4	F79~F64

List of the corresponding error codes:

Error code		Description
Error	E01	Over Frequency Range
	E02	Under Frequency Range
	E06	Phase Jump
	E07	Grid Quality
	E08	Ac connected Fail
	E09	No Grid
	E10	Under Voltage Range_R
	E11	Over Voltage Range_R
	E12	Over Transient Voltage Range_R
	E13	Slow Over Voltage Range_R
	E15	Under Voltage Range_S
	E16	Over Voltage Range_S
	E17	Over Transient Voltage Range_S
	E18	Slow Over Voltage Range_S
	E20	Under Voltage Range_T
	E21	Over Voltage Range_T
	E22	Over Transient Voltage Range_T
	E23	Slow Over Voltage Range_T
	E25	3 Phases Unbalanced
	E30	String1 PV input voltage too high
	E31	String2 PV input voltage too high
Warning	W01	SOLAR_1_UVR
	W02	SOLAR_2_UVR
	W11	Fan Warning
Fail	F01	DC Injection_R
	F02	DC Injection_S
	F03	DC Injection_T
	F04	DC Injection_Total
	F05	Inside OTP
	F06	Inside NTC Circuit Fail
	F07	Heat Sink over temperature
	F08	Heat Sink Ntc1 Circuit Fail
	F09	Heat Sink Ntc2 Circuit Fail
	F10	Heat Sink Ntc3 Circuit Fail
	F11	Inverter Choke over temperature
	F13	Relay Open
	F14	Firmware Incompatibility

	F15	DSP ADC Vgrid/Iout Bias Fail
	F16	DSP ADC Vin/Vbus Bias Fail
	F17	DSP ADC Iin/Iboost Bias Fail
	F18	Red. ADC Vgrid/Vinv Bias Fail
	F19	Red. ADC Iout_dc Bias Fail
	F20	Efficiency Abnormal
	F21	Fan Fail
	F22	Internal Communication Fault (between Redundant)
	F23	Internal Communication Fault (between Display)
	F24	Residual Current Over Rating
	F25	Insulation
	F26	3P Current Unbalanced
	F27	RCMU Circuit Fail
	F28	Relay Test Short
	F29	Relay Test Open
	F30	Bus unbalance
	F31	Bus_P over voltage rating
	F32	Bus_P under voltage rating
	F33	Bus_N over voltage rating
	F34	Bus_N under voltage rating
	F35	Bus voltage over rating
	F36	Output Current Transient Over Rating_R
	F37	Output Current Over Rating_R
	F38	Output Current Transient Over Rating_S
	F39	Output Current Over Rating_S
	F40	Output Current Transient Over Rating_T
	F41	Output Current Over Rating_T
	F42	CT current sensor Fail_A
	F43	CT current sensor Fail_B
	F44	CT current sensor Fail_C
	F45	HW OOCP circuit
	F46	Inverter Failure
	F50	Zero Cross Circuit Fail
	F60	PV1 Current Over Rating
	F61	PV2 Current Over Rating
	F70	PV1 Current Transient Over Rating
	F71	PV2 Current Transient Over Rating

Example:

If Error0=192 i.e. 0xC0 in hexadecimal, or 0000 0000 1100 0000 in binary, this means that there are 2 errors on the inverter: E6 = Phase Jump E7= Grid Quality

Please see the manufacturer's documentation for further details of the error codes.

4 List of supported devices

All Socomec inverters from the "Sunsys Pro" range with a 2-wire RS485 interface are handled by the WebdynSun.

As the B10 inverter does not possess a 2-wire RS485 interface, it cannot be handled by the WebdynSun.