Appendix for

Ingeteam inverters

WebdynSun

The monitoring gateway for your solar installation

CONTENTS

1 Connecting the gateway to IngeconSun inverters via the RS485(A) communications bus 3
1.1 Connecting at the end of the bus 3
1.2 Connecting in the middle of the bus 5
2 Discovering the Ingeteam inverter network and the file DAQ.ini 7
3 Definition files for Ingeteam inverter families 8
4 Status variables 13
5 Ingeteam inverter parameter files 14
6 Ingeteam inverter alarm files 15
7 Ingeteam inverter command files 16

1 Connecting the gateway to IngeconSun inverters via the RS485(A) communications bus

This chapter describes the method of connecting the WebdynSun to the RS485 bus communications bus for communication with the inverters.
The gateway may be connected at the end of the RS485 communications bus or in the middle of the bus.
The gateway can handle a maximum of 100 IngeconSun inverters.

All wiring must be carried out only by a specialised qualified electrician.
Prior to installation, all equipment connected to the corresponding communications bus must be disconnected on both sides (DC and AC).
Respect all safety recommendations appearing in inverter documentation.

Remember to disconnect the original supervision device.
As the IngeconSun protocol operates on a Modbus network basis, there would be a conflict between this device and the WebdynSun, with both of them trying to communicate as Master modules.

To ensure correct operation of the RS485 data bus, it must be fitted with a 120 ohm termination plug at both ends.
Depending on the position of the gateway on the bus, this plug must be enabled or disabled via a pair of jumpers mounted inside the casing.

1.1 Connecting at the end of the bus

Positions of the JMP2 and JMP3 jumpers:
The two jumpers JMP2 and JMP3 inside the casing must be set to activate the 120 ohm bus terminator plug.

By default, the gateway is configured to be located at the end of the bus.
Consequently, the jumpers are plugged into the “Activation” position of the 120 ohm terminator.

Hardware version 1:

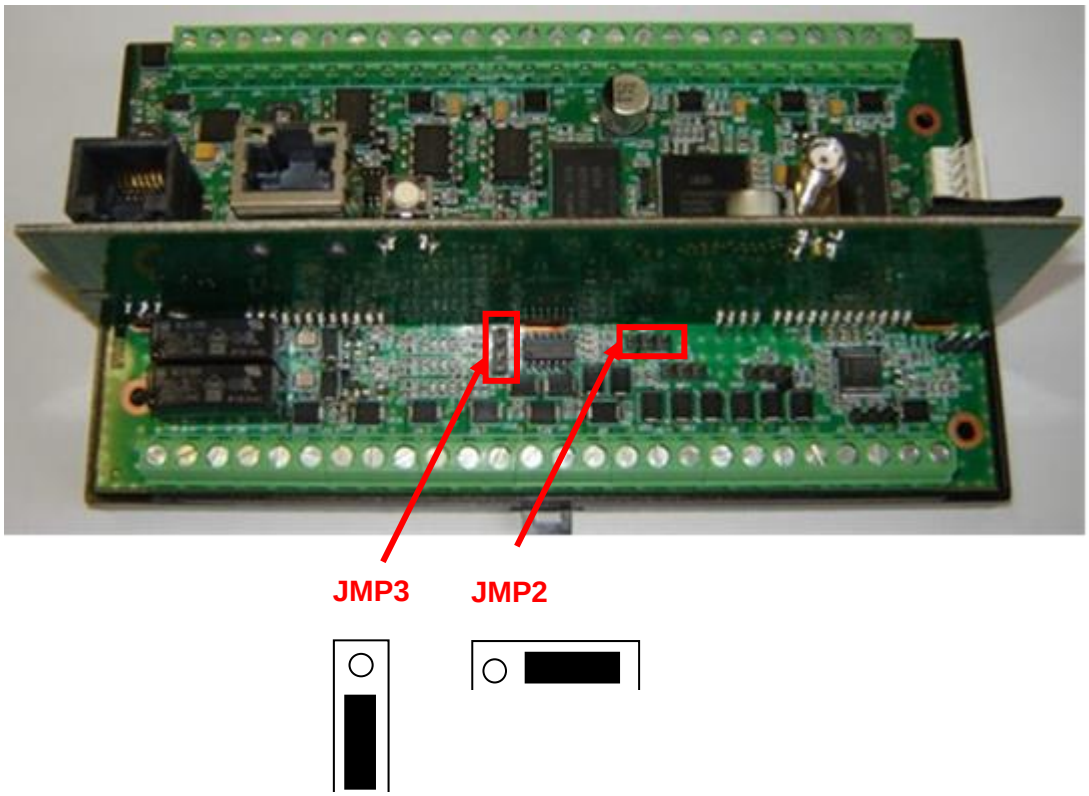

Hardware version 2:

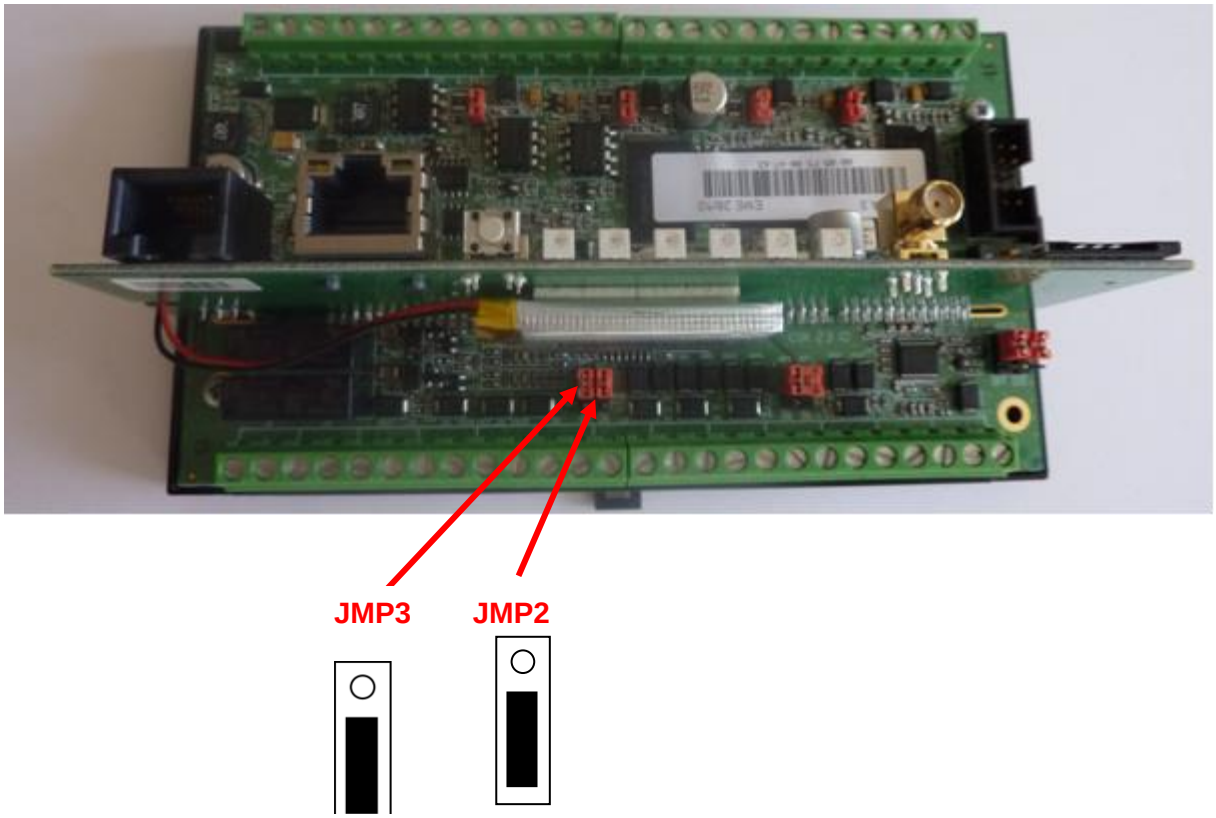

Connecting inverters to the RS485 bus:
Consult the inverter documentation regarding the principles governing RS485 connection and wiring.

Once the RS485 cable has been brought up to the gateway:

1. Strip around 4 cm of the outer sheath from the RS485 communications cable.
2. Trim the shielding back to match the cable sheath.
3. Bare around 6 mm of the wires.
4. Connect the conductors to the connector marked RS485(A), respecting the allocations in your RS485 communications bus.

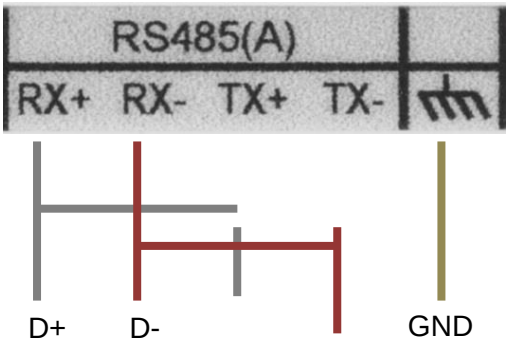

1.2 Connecting in the middle of the bus

Positions of the JMP2 and JMP3 jumpers:
Both the JMP2 and the JMP3 jumpers inside the casing must be positioned so as to deactivate the 120 ohm bus terminator plug.

Hardware version 1:

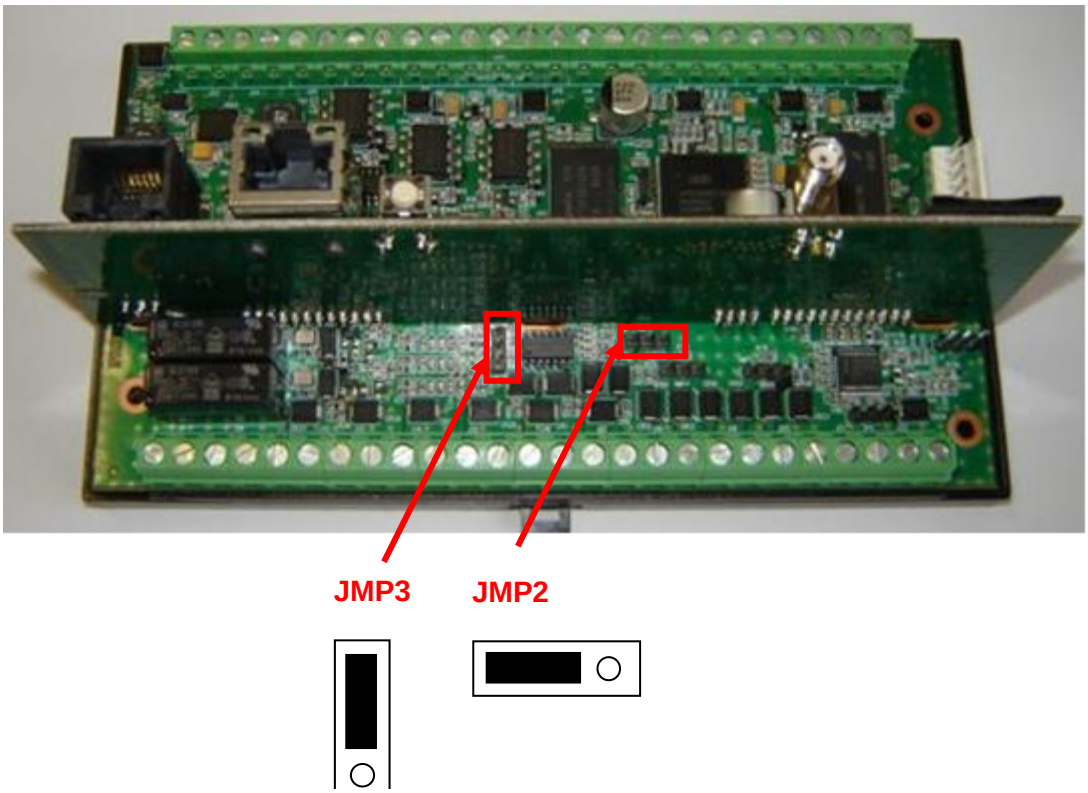

Hardware version 2:

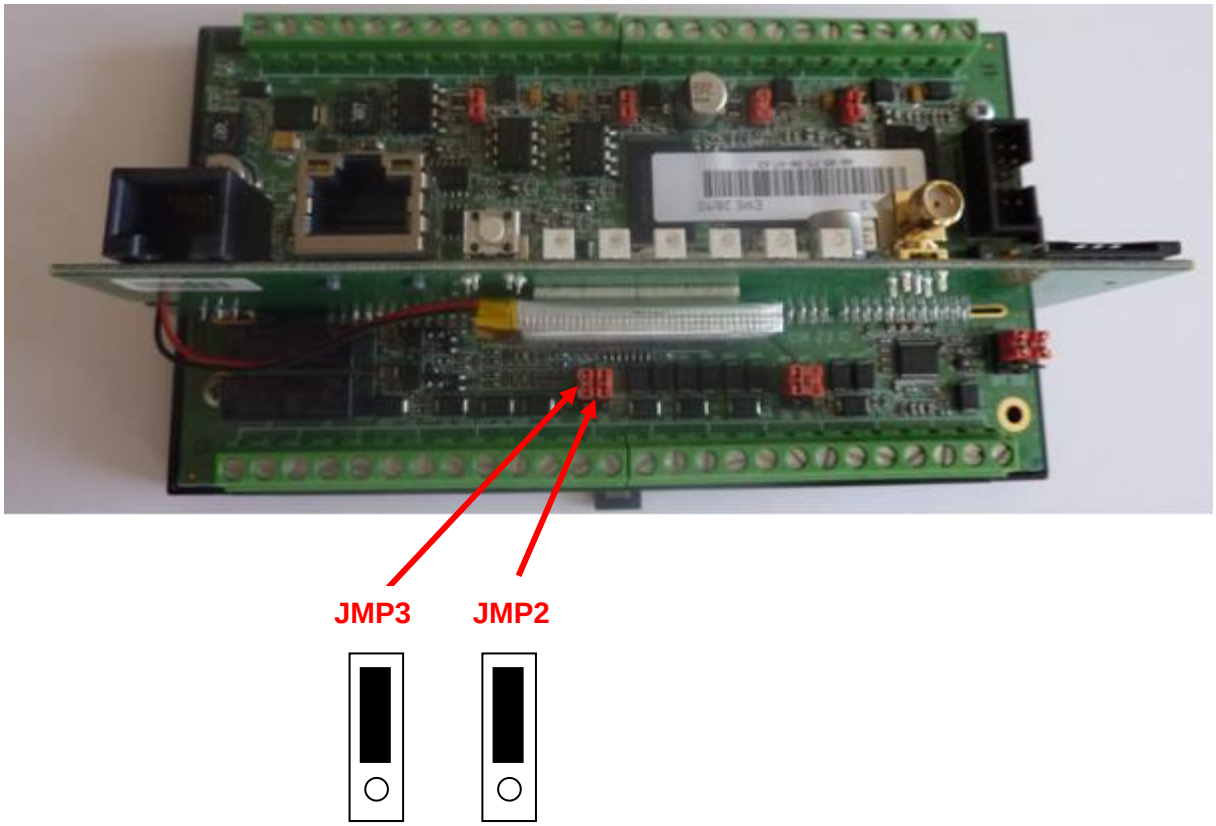

Connecting inverters to the RS485 bus:
Consult the inverter documentation regarding the principles governing RS485 connection and wiring.

Once the two RS485 cables have been brought up to the gateway:

1. Strip around 4 cm of the outer sheath from the RS485 communications cables.
2. Trim the shielding back to match the cable sheath.
3. Bare around 6 mm of the wires.
4. Connect the conductors to the connector marked RS485(A), respecting the allocations in your RS485 communications bus.

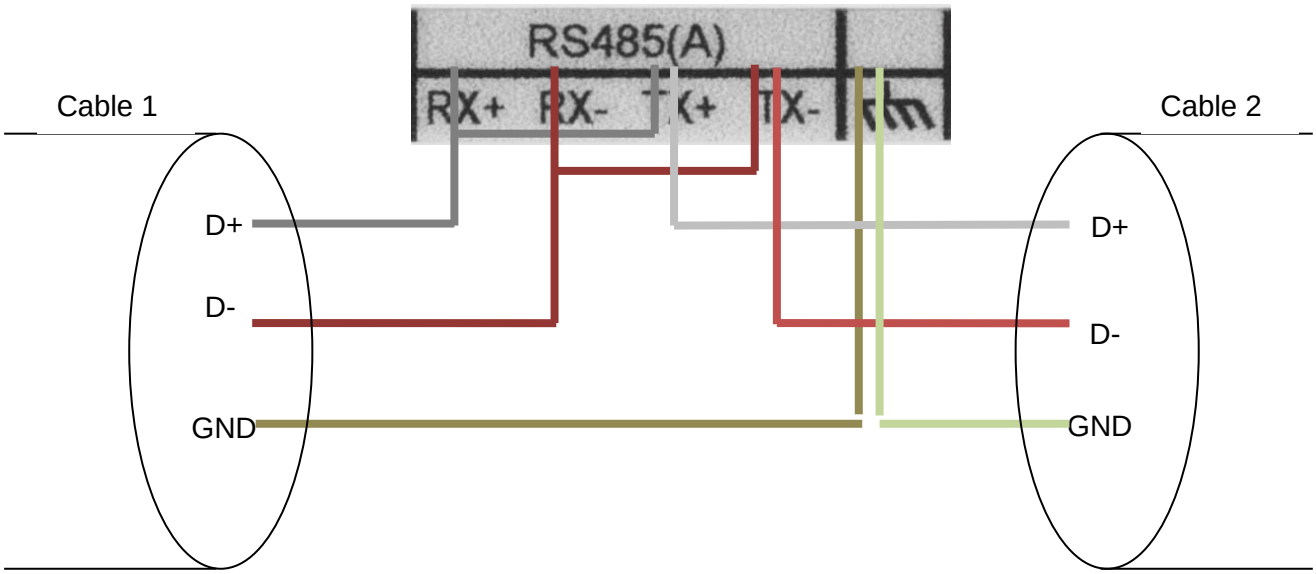

2 Discovering the Ingeteam inverter network and the file DAQ.ini

The IngeconSun protocol allows for the discovery of inverters that have been addressed manually beforehand.
Although it is possible to address inverters with addresses ranging from 1 to 247 (by Modbus rules), we recommend using the first addresses available.
In other words, to supervise five devices, give them the addresses 1 to 5.

The discovery process can then be performed via the built-in Web server or via a command file.

Following this discovery, if a connection is made and there is no *IDSite*_daq.ini file present in the /CONFIG directory of the FTP server, an *IDsite*_daq.ini file containing the declarations of all the inverters discovered will be generated automatically, then uploaded to the server.

A generic definition file is created during the discovery phase, and is used to provide information for the automatically generated *IDsite*_daq.ini file.
The definition file is also uploaded during the connection, if it is not already present.

The generic definition file is suitable for single-phase inverters designed after 2009 (ref: AAY). For other models and junction boxes, you must use the appropriate definition file presented in the next chapter: ***3 Definition files for Ingeteam inverter families.***

3 Definition files for Ingeteam inverter families

Filename format:
*IDSite*_INV_*Family*.ini

This file is uploaded by the gateway after an inverter discovery phase. It may be modified by the user.
IDSite: site identification number.
Family: inverter family.

Definition file uploaded by default:
Suitable for single-phase inverters designed after 2009 (ref: AAY)

```
1;11;0;1;SlaveID;-;0;0;1
2;11;1;1;RunStatus;-;0;0;4
3;11;2;12;Serial Number;-;0;0;1
4;11;14;10;Firmware Version;-;0;0;1
5;4;0;4;Total-Energy;kWh;0;0;4
6;4;4;4;Hours UpAndRunning;-;0;0;4
7;4;8;4;NumberOfConnectionToGrid;-;0;0;4
8;4;12;4;Internal State;-;0;0;4
9;4;16;4;Aux Register;-;0;0;4
10;4;20;4;Alarms;-;1;0;8
11;4;24;2;Vdc;V;1;0;2
12;4;26;2;Idc;A;0.01;0;2
13;4;28;2;V_bus;V;1;0;2
14;4;30;2;AC_Current;A;0.01;0;2
15;4;32;2;AC_Power;W;1;0;2
16;4;34;2;Cos(phi);-;0.001;0;2
17;4;36;2;SignOfSin(phi);-;1;0;2
18;4;38;2;AC Grid_Voltage;V;1;0;2
19;4;40;2;AC Grid_Frequency;Hz;0.01;0;2
20;4;42;2;Current_year;-;1;0;4
21;4;44;2;Current_month;-;1;0;4
22;4;46;2;Current_day;-;1;0;4
23;4;48;2;Current_hour;H;1;0;4
24;4;50;2;Current_minute;min;1;0;4
25;4;52;2;Current_sec;s;1;0;4
```

For older single-phase devices, use the following definition file:

```
1;11;0;1;SlaveID;-;0;0;1
2;11;1;1;RunStatus;-;0;0;1
3;11;2;12;SN;-;0;0;1
4;11;14;10;FirmwareVersion;-;0;0;1
5;4;0;4;Total_Energy;kWh;1;0;4
6;4;4;4;Hours_UpAndRunning;H;1;0;4
7;4;8;4;NbOfConnectionToGrid;-;1;0;4
8;4;12;4;NbOfError;-;1;0;8
9;4;16;4;Inverter_Alarm;-;1;0;8
10;4;20;4;Inverter_State;-;1;0;8
11;4;24;2;Vdc;V;1;0;2
12;4;26;2;Idc;0.01A;1;0;2
13;4;28;2;V_Bus;V;1;0;2
14;4;30;2;AC_Current; A;0.01;0;2
15;4;32;2;AC_Power;W;1;0;2
16;4;34;2;Cos(phi);-;0.01;0;2
17;4;36;2;Sign_of_Sin(phi);-;1;0;4
18;4;38;2;AC Grid_Voltage;V;1;0;2
19;4;40;2;AC Grid_Frequency; Hz;0.01;0;2
20;4;42;2;Current_year;-;1;0;4
21;4;44;2;Current_month;-;1;0;4
22;4;46;2;Current_day;-;1;0;4
23;4;48;2;Current_hour;H;1;0;4
24;4;50;2;Current_minute;min;1;0;4
25;4;52;2;Current_sec;s;1;0;4
26;4;54;2;Sun position;degrees;0.1;0;4
27;4;56;2;Suntracker1_Mode;-;1;0;4
28;4;58;2;Suntracker1_motor_state;-;1;0;4
29;4;60;2;Suntracker1_motor_position; degrees;0.1;0;4
30;4;62;2;Suntracker1_motor_position order; degrees;0.1;0;4
31;4;64;2;Suntracker1_Alarm;-;1;0;4
32;4;66;2;Suntracker1_automatic_tracking_offset;degrees;0.1;0;4
33;4;68;2;Suntracker1_automatic_step; degrees;0.1;0;4
34;4;70;2;Suntracker2_Mode;-;1;0;4
35;4;72;2;Suntracker2_motor_state;-;1;0;4
36;4;74;2;Suntracker2_motor_position; degrees;0.1;0;4
37;4;76;2;Suntracker2_motor_position order; degrees;0.1;0;4
38;4;78;2;Suntracker2_Alarm;-;1;0;8
39;4;80;2;Suntracker2_automatic_tracking_offset; degrees;0.1;0;4
40;4;82;2;Suntracker2_automatic_step; degrees;0.1;0;4
41;4;84;2;Analog_Input1;-;1;0;4
42;4;86;2;Analog_Input2;-;1;0;4
43;4;88;2;Analog_Input3;-;1;0;4
44;4;90;2;Analog_Input4;-;1;0;4
45;4;92;2;Analog_Input5-PT100 n1;-;1;0;4
46;4;94;2;Analog_Input6-PT100 n2;-;1;0;4
```

For three-phase inverters, use the following definition file:

```
1;11;0;1;SlaveID;-;0;0;1
2;11;1;1;RunStatus;-;0;0;1
3;11;2;10;SN;-;0;0;1
4;11;14;8;FirmwareVersion;-;0;0;1
5;4;0;4;Total Energy;kWh;1;0;4
6;4;4;4;Hours up and running;H;1;0;4
7;4;8;4;Number of connection to grid;-;1;0;4
8;4;12;4;Inverter Alarms;-;1;0;8
9;4;16;2;Vdc from PV modules;V;1;0;2
10;4;18;2;Idc from PV modules;A;1;0;2
11;4;20;2;Vac1;V;1;0;2
12;4;22;2;Vac2;V;1;0;2
13;4;24;2;Vac3;V;1;0;2
14;4;26;2;Iac1;A;1;0;2
15;4;28;2;Iac2;A;1;0;2
16;4;30;2;Iac3;A;1;0;2
17;4;32;2;Cos(phi);-;1;0;4
18;4;34;2;Sign of Sin(phi); -;0,001;0;4
19;4;36;2;Power(Pac); W; 0.1;0;4
20;4;38;2;Grid Frequency(Fac); Hz; 0,01;0;4
21;4;40;2;Current year;-;1;0;4
22;4;42;2;Current month;-;1;0;4
23;4;44;2;Current day;-;1;0;4
24;4;46;2;Current hour;H;1;0;4
25;4;48;2;Current minute;min;1;0;4
26;4;50;2;Current sec;s;1;0;4
27;4;52;2;Sun position; Degree; 0.1;0;4
28;4;54;2;Suntracker 1, Mode;-;1;0;4
29;4;56;2;Suntracker 1, motor state;-;1;0;4
30;4;58;2;Suntracker 1, motor position;Degree; 0.1;0;4
31;4;60;2;Suntracker 1, motor position order;Degre; 0.1;0;4
32;4;62;2;Suntracker 1, Alarm;-;1;0;4
33;4;64;2;Suntracker 1, automatic tracking offset;Degree; 0.1;0;4
34;4;66;2;Suntracker 1, automatic step;Degree; 0.1;0;4
35;4;68;2;Suntracker 2, Mode;-;1;0;4
36;4;70;2;Suntracker 2, motor state;-;1;0;4
37;4;72;2;Suntracker 2, motor position;Degree; 0.1;0;4
38;4;74;2;Suntracker 2, motor position order;Degree; 0.1;0;4
39;4;76;2;Suntracker 2, Alarm;-;1;0;4
40;4;78;2;Suntracker 2, automatic tracking offset;Degree; 0.1;0;4
41;4;80;2;Suntracker 2, automatic step;Degree; 0.1;0;4
42;4;82;2;Analog Input 1;-;1;0;4
43;4;84;2;Analog Input 2;-;1;0;4
44;4;86;2;Analog Input 3;-;1;0;4
45;4;88;2;Analog Input 4;-;1;0;4
462;4;92;2;Analog Input 6-PT100 n2;-;1;0;4
47;4;94;22;reserved;-;1;0;4
48;4;116;4;Energy Resettable Counter;-;1;0;4
49;4;120;4;Resettable Hours up and running;-;1;0;4
```

```
50;4;124;4;Resettable Number of connections to grid;-;1;0;4
51;4;128;4;Instantaneous inverter alarms;-;1;0;4
52;4;130;4;Inverter alarms maintained;-;1;0;4
53;4;134;2;Qac; -;0,1;0;4
54;4;136;2;Zpos;-;1;0;4
55;4;138;2;Zneg;-;1;0;4
56;4;140;2;Power electronics temperature;-;1;0;4
57;4;142;2;Control electronics temperature;-;1;0;4
58;4;144;2;Inverter State;-;1;0;4
59;4;146;2;VpvN: Voltage NEGATIVE-EARTH;-;1;0;4
60;4;148;2;VpvN: Voltage POSITIVE-EARTH;-;1;0;4
61;4;150;2;Nominal power DIV10;-;1;0;4
62;4;152;2;Pos. Last stop reason (0 to 4);-;1;0;4
63;4;154;2;Year stop reason 0;-;1;0;4
64;4;156;2;Month stop reason 0;-;1;0;4
65;4;158;2;Day stop reason 0;-;1;0;4
66;4;160;2;Hour stop reason 0;-;1;0;4
67;4;162;2;Minute stop reason 0;-;1;0;4
68;4;164;2;Stop reason 0;-;1;0;4
69;4;168;2;Year stop reason 1;-;1;0;4
70;4;170;2;Month stop reason 1;-;1;0;4
71;4;172;2;Day stop reason 1;-;1;0;4
72;4;174;2;Hour stop reason 1;-;1;0;4
73;4;176;2;Minute stop reason 1;-;1;0;4
74;4;178;2;Stop reason 1;-;1;0;4
75;4;180;2;Year stop reason 2;-;1;0;4
76;4;182;2;Month stop reason 2;-;1;0;4
77;4;184;2;Day stop reason 2;-;1;0;4
78;4;186;2;Hour stop reason 2;-;1;0;4
79;4;188;2;Minute stop reason 2;-;1;0;4
80;4;190;2;Stop reason 2;-;1;0;4
81;4;192;2;Year stop reason 3;-;1;0;4
82;4;194;2;Month stop reason 3;-;1;0;4
83;4;196;2;Day stop reason 3;-;1;0;4
84;4;198;2;Hour stop reason 3;-;1;0;4
85;4;200;2;Minute stop reason 3;-;1;0;4
86;4;202;2;Stop reason 3;-;1;0;4
87;4;204;2;Year stop reason 4;-;1;0;4
88;4;206;2;Month stop reason 4;-;1;0;4
89;4;208;2;Day stop reason 4;-;1;0;4
90;4;210;2;Hour stop reason 4;-;1;0;4
91;4;212;2;Minute stop reason 4;-;1;0;4
92;4;214;2;Stop reason 4;-;1;0;4
93;4;218;2;Waiting time to connect;-;1;0;4
94;4;220;2;Total waiting time to connect;-;1;0;4
```

For StringBoxes, use the following definition file:

```
1;11;0;1;SlaveID;-;0;0;1
2;11;1;1;RunStatus;-;0;0;1
3;11;2;10;SN;-;0;0;1
4;11;14;8;FirmwareVersion;-;0;0;1
5;4;0;4;h_total;H;1;0;4
6;4;4;4;Operating Time;-;1;0;4
7;4;8;1;Current from string 1;-;1;0;2
8;4;9;1;Current from string 2;-;1;0;2
9;4;10;1;Current from string 3;-;1;0;2
10;4;11;1;Current from string 4;-;1;0;2
11;4;12;1;Current from string 5;-;1;0;2
12;4;13;1;Current from string 6;-;1;0;2
13;4;14;1;Current from string 7;-;1;0;2
14;4;15;1;Current from string 8;-;1;0;2
15;4;16;1;Current from string 9;-;1;0;2
16;4;17;1;Current from string 10;-;1;0;2
17;4;18;1;Current from string 11;-;1;0;2
18;4;19;1;Current from string 12;-;1;0;2
19;4;20;1;Current from string 13;-;1;0;2
20;4;21;1;Current from string 14;-;1;0;2
21;4;22;1;Current from string 15;-;1;0;2
22;4;23;1;Current from string 16;-;1;0;2
23;4;24;2;Sum of instant currents;-;1;0;4
24;4;26;2;Temperature;-;1;0;2
25;4;28;2;String current alarms;-;1;0;8
26;4;30;2;Fuse alarms;-;1;0;8
27;4;32;4;reserved;-;0;0;0
28;4;36;2;General alarms;-;1;0;8
29;4;38;2;F_Year;-;1;0;4
30;4;40;2;F_Month;-;1;0;4
31;4;42;2;F_Day;-;1;0;4
32;4;44;2;H_Hours;-;1;0;4
33;4;46;2;H_Minutes;-;1;0;4
34;4;48;2;H_Seconds;-;1;0;4
35;4;50;16;reserved;-;0;0;0
36;4;66;2;Azimuth_sun_pos_port10;-;1;0;4
37;4;68;2;Zenith_sun_pos_port10;-;1;0;4
38;4;70;2;Seg_1_Mode;-;1;0;4
39;4;72;2;Seg_1_Motor_State;-;1;0;4
40;4;74;2;Seg_1_Motor_Pos_port10;-;1;0;4
41;4;76;2;Seg_1_Motor_Pos_Order_port10;-;1;0;4
42;4;78;2;Seg_1_Est;-;1;0;4
38;4;80;2;Seg_1_Offset;-;1;0;4
39;4;82;2;Seg_1_Step;-;1;0;4
40;4;84;2;Seg_1_Mode ;-;1;0;4
41;4;86;2;Seg_1_Motor_State;-;1;0;4
42;4;88;2;Seg_1_Motor_Pos_port10;-;1;0;4
43;4;90;2;Seg_1_Motor_Pos_Order_port10;-;1;0;4
44;4;92;2;Seg_1_Est;-;1;0;4
```

```
45;4;94;2;Seg_1_Offset;-;1;0;4
46;4;96;2;Seg_1_Step;-;1;0;4
47;4;98;2;Analog_Input_1;-;1;0;4
48;4;100;2;Analog_Input_2;-;1;0;4
49;4;102;2;Analog_Input_3;-;1;0;4
50;4;104;2;Analog_Input_4;-;1;0;4
51;4;106;2;Analog_Input_5;-;1;0;4
52;4;108;2;Analog_Input_6;-;1;0;4
53;4;110;4;reserved;-;0;0;0
```

These files cover all the registers of the inverters, with:

Field1	Field2	Field3	Field4	Field5	Field6	Field7	Field8	Field9
Index	*Command*	*Offset*	*Datasize*	*Name*	*Units*	*A*	*B*	***Action***

The fields *Command*, *Offset* and *Datasize* enable the gateway to capture the variable from the information in the Ingeteam protocol. These are the only fields that must under no circumstances be modified.

Fields 7 (*A*) and 8 (*B*) are the coefficients to be applied to readings, so that these can be expressed in the unit specified in Field 6 (*Units*).
Value (units given by Field 6) = A * Value (original units) + B (correction offset)

The action to be applied to each variable is specified at the end of the line:

- ***Action=0***: Variable not collected.
- ***Action=1***: Variable treated as read-only parameter.
- ***Action=2***: Min/max/avg values.
- ***Action=4***: Instantaneous value.
- ***Action=8***: Variable treated as an alarm.

N.B. Depending on the variable type, several actions are applicable:

Variable type	Variable format	Possible actions
Instantaneous		0, 2, 4
Cumulative		0, 4
Alarm	Internal State, Aux Register, Alarms	0, 4, 8
Parameter	Cmd 11 (except run status)	0, 1

N.B. If the action defined is not consistent with the variable type, it is ignored.

4 Status variables

- Internal State
- Aux Register

These variables are used internally by Ingeteam, and we have no information on the interpretation of their codes.

- Alarms

ALARMA_VIN (0x0001): Excessive input voltage.

ALARMA_FRED (0x0002): Grid frequency outside limits.

ALARMA_VRED (0x0004): Grid voltage outside limits.

ALARMA_INT_H (0x0008): Overcurrent in H bridge.

ALARMA_INT_SUB (0x0010): Overcurrent in voltage boost.

ALARMA_AISL_DC (0x0020): DC isolation error.

ALARMA_IRED_EFICAZ (0x0040): Excessive RMS grid current.

ALARMA_TEMPERATURA (0x0080): Max. Temperature reached.

ALARMA_VBUS (0x0100): Excessive bus voltage.

ALARMA_CONFIG (0x0200): Change in configuration.

ALARMA_PARO_MANUAL (0x0400): Stop flag active.

ALARMA_AISL_AC (0x0800): AC isolation error.

ALARMA_IRED_INSTAN (0x1000): Excessive instant grid current.

ALARMA_VINV (0x2000): Produced voltage off limits.

ALARMA_ZRED (0x4000): Grid impedance off limits.

ALARMA_ADC (0x8000): A/D converters reading error.

5 Ingeteam inverter parameter files

Filename format:
*IDSite*_INV_P_*AAMMJJ_hhmmss*.csv.gz
Where:
IDSite: gateway identifier.

The parameters of the inverters present on the network are sent to the FTP server in two cases:

- During the installation phase triggered by pressing the push-button on the gateway;
- Via a command file of the type GATEWAY: Send inverter parameters (*see chapter on managing command files in the User's Manual*).

The file format is as follows: (fields in green are optional data that can be enabled or disabled in *IDSite*_daq.ini (*see* section *7.3. Declaring and configuring inverters* in the User's Manual)).

```
SNINV; 100101059R05;1;
TypeINV;ING_INV_TriPhase.ini;
4;1;2;3;4;
18/04/11-14:17:24; 100;ff;100101059R05;AAS1201_U
SNINV;100101059R04;2;
TypeINV;ING_INV_TriPhase.ini;
4;1;2;3;4;
18/04/11-14:17:24;100;ff;100101059R04;AAS1201_U
```

For each inverter, this file details the variables defined as parameters in the file *IDSite*_INV_*family*.ini *(see Chapter 3: Definition files for Ingeteam inverter families)*.

SNINV = Serial number of inverter n (n=0 to 99).
TypeINV = Family of inverter n.

The column heading ";1;2;3;4;5;…;" is added if the option (DAQ_HeaderOption) is enabled in *IDSite*_daq.ini (*see* section *7.3. Declaring and configuring inverters* in the User's Manual).

To minimise the sizes of transmitted files, the parameter file is compressed in .gz format.

6 Ingeteam inverter alarm files

An alarm is generated, then transmitted to the remote server in the form of a file on the FTP server (*IDSite_AL_YYMMDD_hhmmss.csv.gz*).
The data stored is also uploaded at the same time as an alarm.

N.B. See 4: Status variables, for an explanation of the alarm codes.

Alarm of the Ingeteam type:
This type of alarm is raised on a change in the status of a variable defined as an alarm in the associated definition file.

Date–Time	Type	Field 1	Field 2	Field 3	Field 4

Where:

Date–Time	Timestamp when alarm triggered, in format YY/MM/DD-hh:mm:ss
Type	INV: Alarm type is Ingeteam
Field 1	*IDsite*_INV_*family*.ini: Name of reference definition file
Field 2	Serial number of the triggering Ingeteam inverter
Field 3	1 to N: Index of the triggering data item in the associated definition file
Field 4	Status of the trigger item: 0 to n => Code corresponding to status messages or to messages indicating inverter malfunction.

Example:

```
09/10/09-08:45:38;INV;ING_INV_TriPhase.ini;100101059R04;10;1
```

Mechanism for censoring alarms

For status variables configured as alarms, it is possible to specify, in the definition file, which values are to be censored, i.e. for which an alarm report should not be uploaded, even though the action code is 8.

This mechanism means that an alarm is not uploaded if the value taken by a variable with an action code of 8 has been declared in the list of values to be ignored.

If the status variable does not describe values but a bit field instead, the list of values to be ignored contains the bit values to be ignored. (0 to 7, 0 to 15 or 0 to 31 depending on the bit length of the variable.)

The list of values to be ignored is specific to each variable declared in the definition file with the action code Alarm (8), and is written in the field following that containing the Alarm action code.
The values to be censored are separated by the pipe symbol "|".

Example of the variable Inverter Alarms (a bit field alarm):
The declaration line for this variable is in the definition file.

```
8;4;12;4;Inverter Alarms;-;;;8;0|5
```

In this case, if bit 0 (Excessive input voltage) flips to 1, or if bit 5 (DC isolation error) flips to 1, and no other bit changes, the new value of the whole field will indeed be saved to the data file, but no alarm will be uploaded.

7 Ingeteam inverter command files

It is not possible to send command files to Ingeteam inverters.