Appendix for Siemens/Refusol/AdvancedEnergy inverters

WebdynSun

The monitoring gateway for your solar installation

CONTENTS

1 Introduction 3
2 Connecting the gateway to Siemens inverters via the RS485(A) communications bus 3
2.1 Connecting at the end of the bus 4
2.2 Connecting in the middle of the bus 6
3 Configuring the inverters 8
3.1 Discovering inverters 8
3.2 Inverter definition file 8
4 Inverter parameter files 11
5 Inverter alarm files 11
6 Inverter command files 12

1 Introduction

The present document describes the operations of the WebdynSun gateway in conjunction with Siemens PVM and Refu Refusol inverters.

The gateway can handle a maximum of 100 inverters, but the USS protocol is limited to 32 inverters.

2 Connecting the gateway to Siemens inverters via the RS485(A) communications bus

⚠	All wiring must be carried out only by a specialised qualified electrician. Prior to installation, all equipment connected to the corresponding communications bus must be disconnected on both sides (DC and AC). Respect all safety recommendations appearing in inverter documentation.

Connecting inverters to the RS485 bus:

Consult the inverter documentation regarding the principles governing RS485 connection and wiring.

Once the RS485 cable has been brought up to the gateway:

1. Strip around 4 cm of the outer sheath from the RS485 communications cable.
2. Trim the shielding back to match the cable sheath.
3. Bare around 6 mm of the wires.
4. Connect the conductors to the connector marked RS485(A), respecting the allocations in your RS485 communications bus.

The gateway may be connected at the end of the RS485 communications bus or in the middle of the bus.

2.1 Connecting at the end of the bus

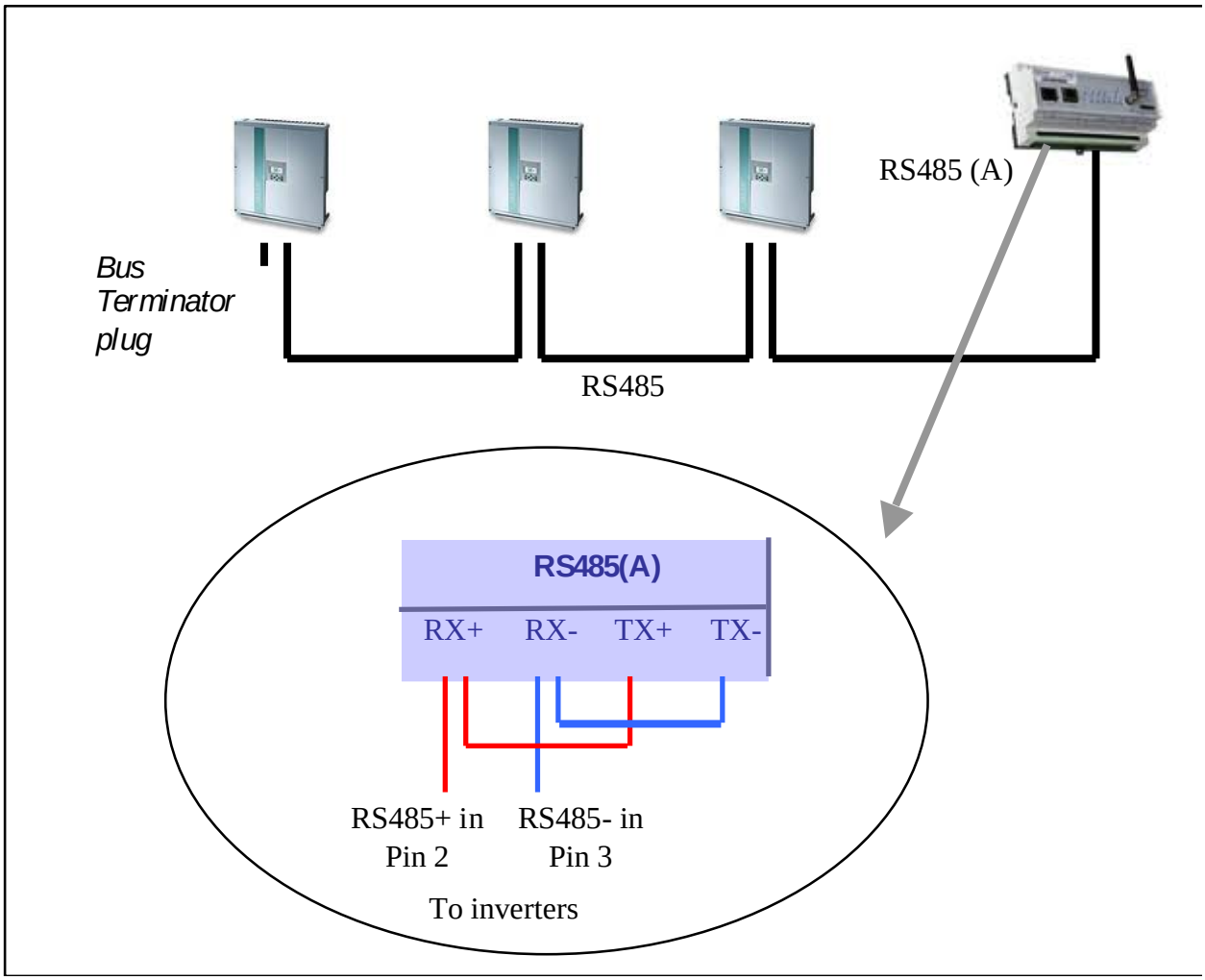

To ensure correct operation of the RS485 data bus, it must be fitted with a 120 ohm termination resistor at both ends.

Please refer to the inverter manufacturer's documentation to see how to provide termination on the inverter end. At the WebdynSun end, this function is provided by configuring the jumpers JMP2 and JMP3.

Positions of the JMP2 and JMP3 jumpers on the gateway:
Only the JMP2 jumper inside the casing needs to be set to activate the 120 ohm bus terminator plug.

	By default, the gateway is configured to be located at the end of a 4–wire RS485 bus. Consequently, the jumpers are plugged into the "Activation" position of the 120 ohm terminator. As the Siemens bus is a 2–wire bus, the JMP3 jumper must be removed.

Hardware version 1:

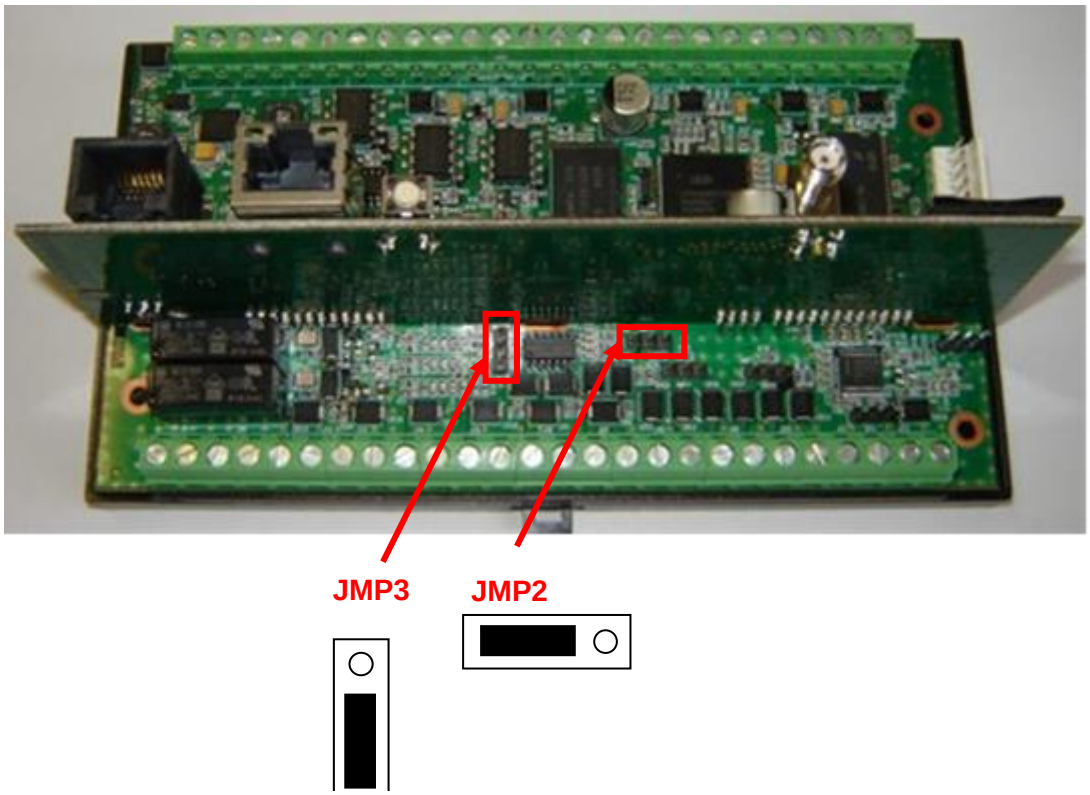

Hardware version 2:

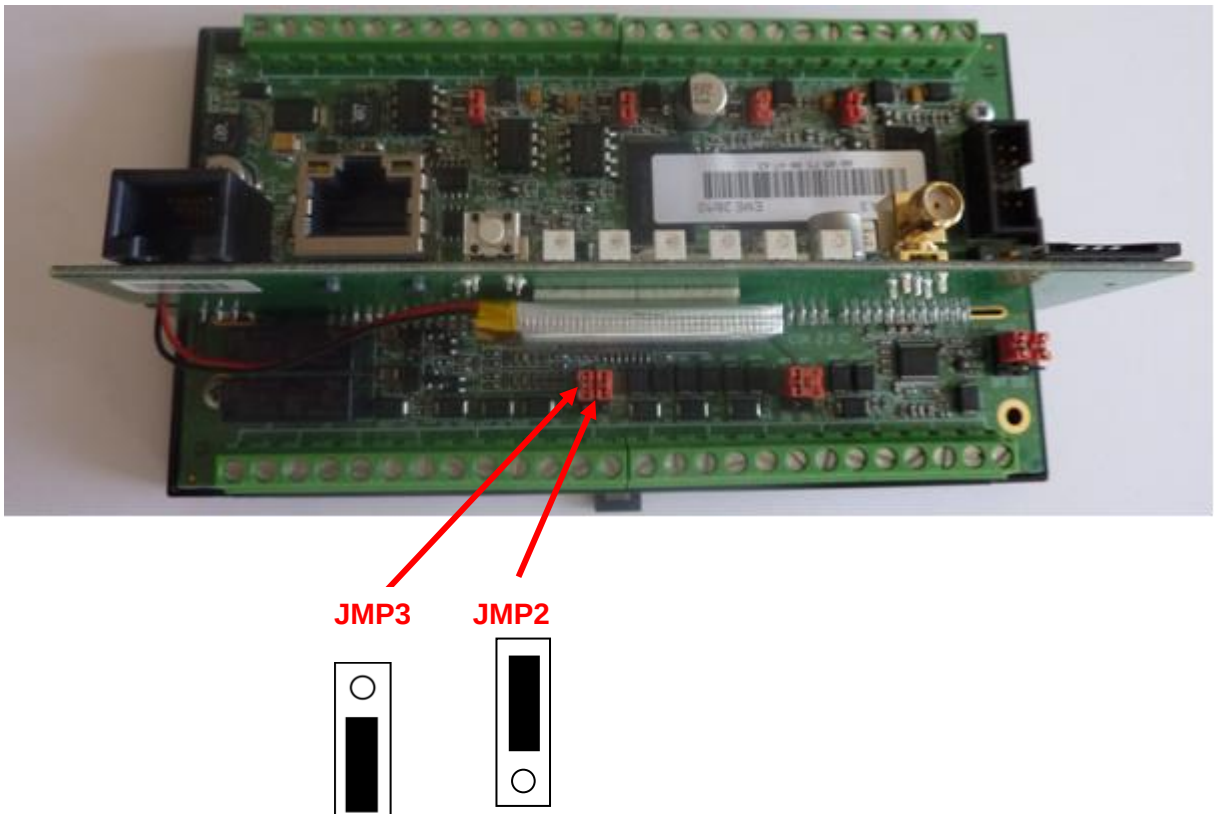

2.2 Connecting in the middle of the bus

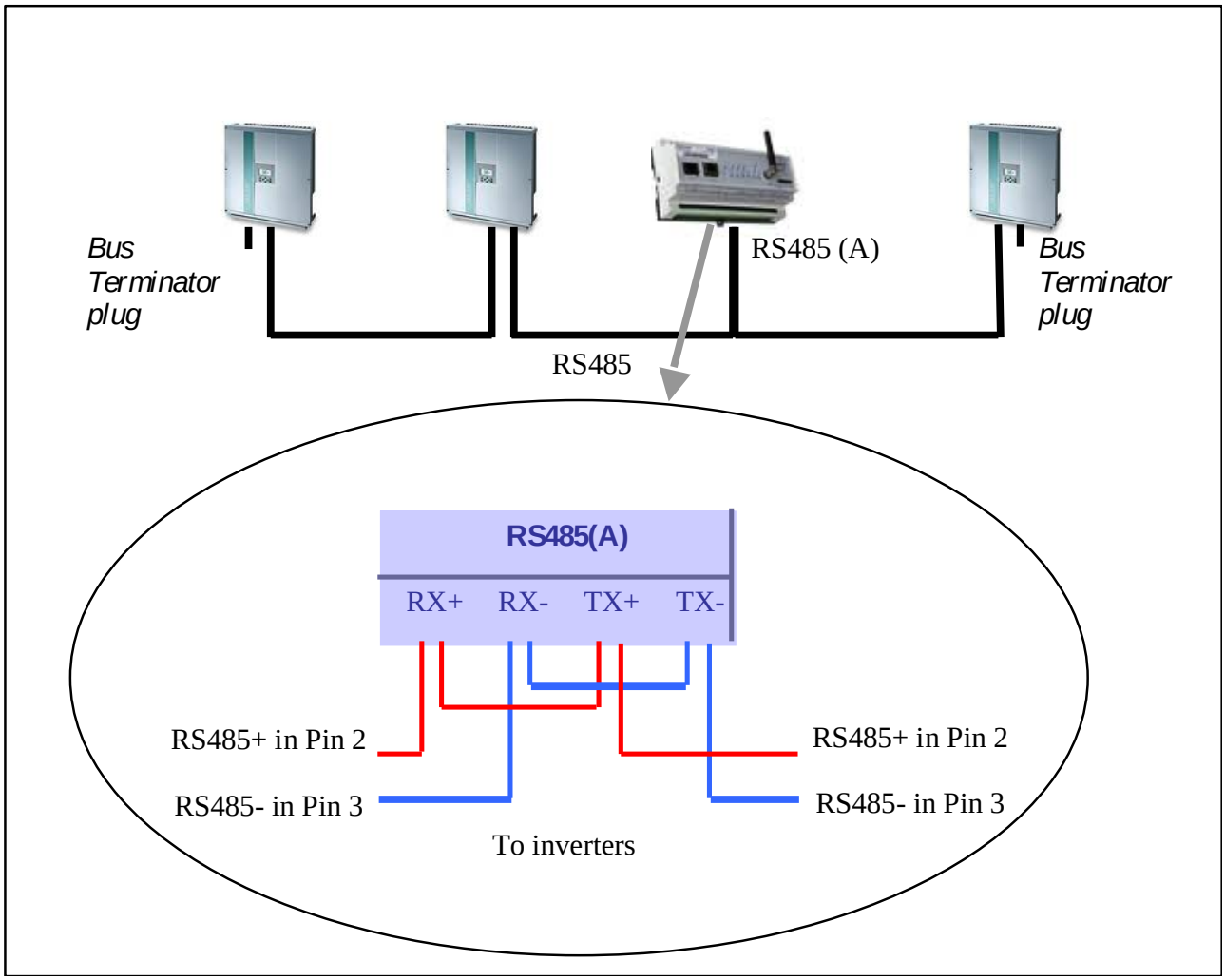

Positions of the JMP2 and JMP3 jumpers on the gateway:
Both the JMP2 and the JMP3 jumpers inside the casing must be positioned so as to deactivate the 120 ohm bus terminator plug.

Hardware version 1:

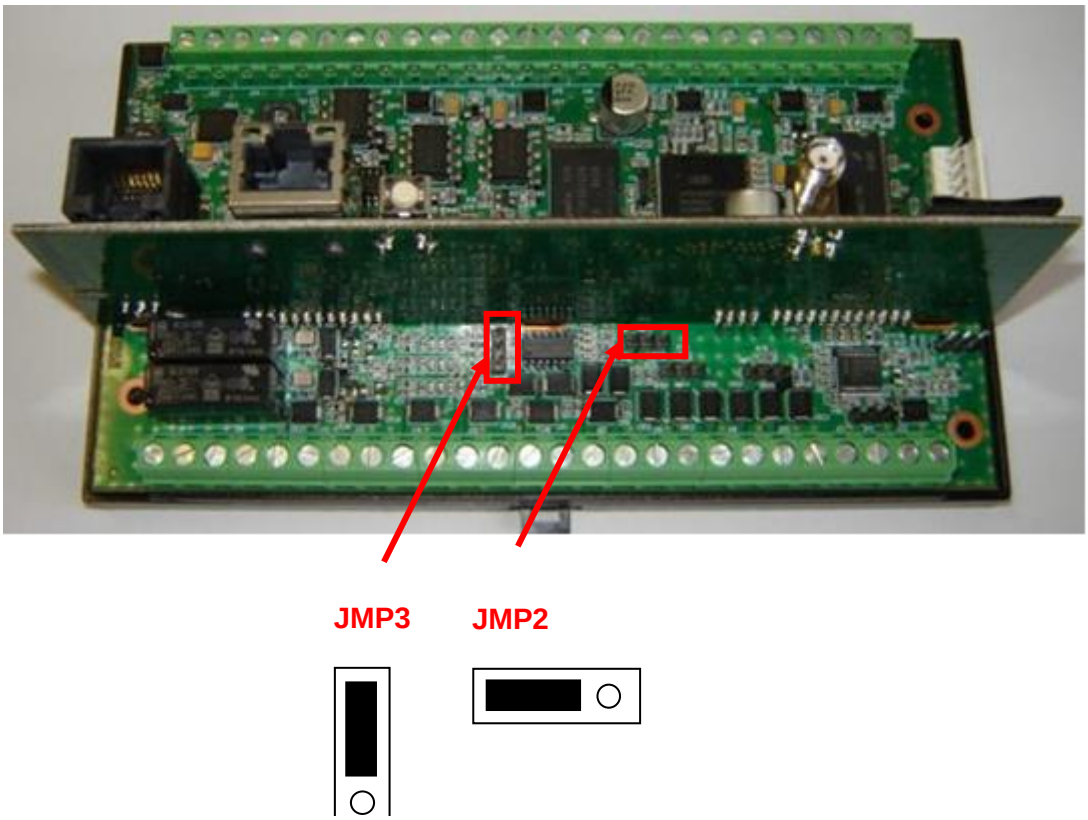

Hardware version 2:

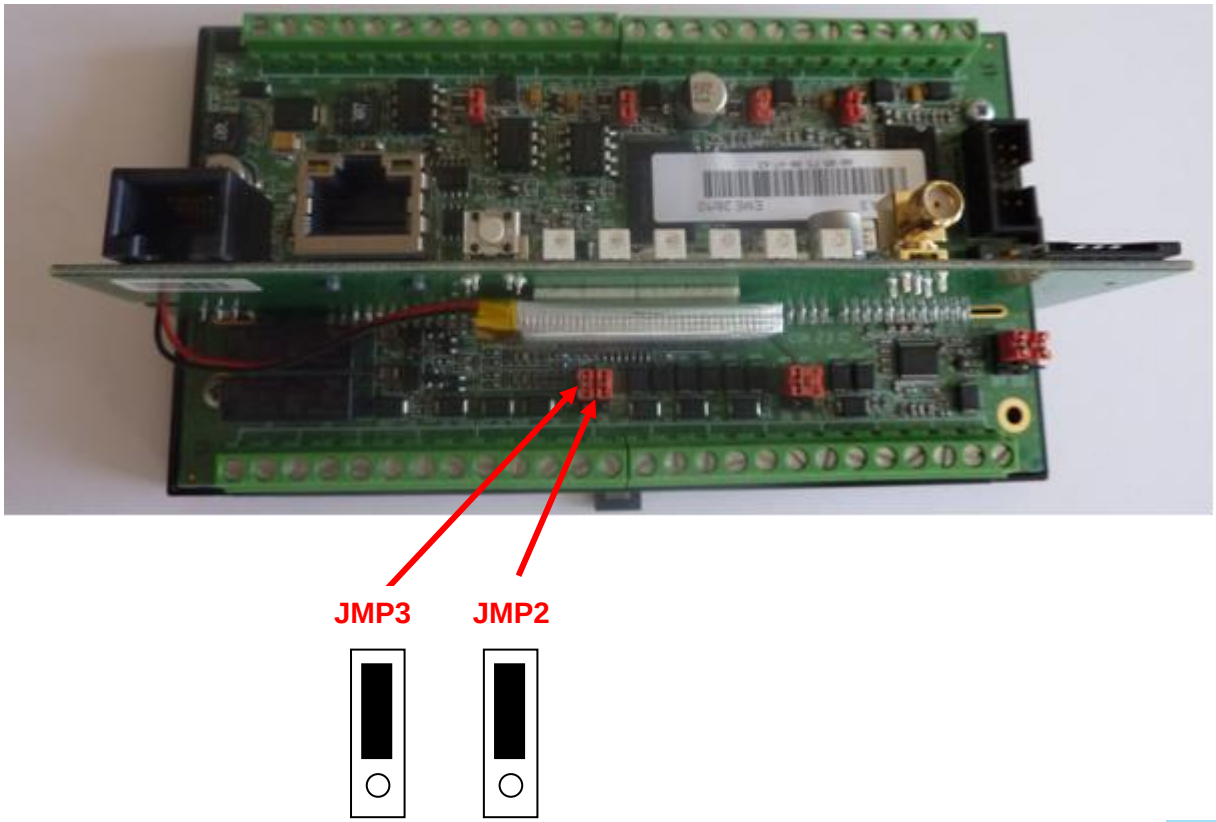

3 Configuring the inverters

To be visible to the gateway, the Siemens or Refu inverter must be configured for operations via RS485, and must have an address. This address must be unique on the bus.

Addressing is manual and is carried out via the configuration menu of the inverter. Please refer to the manufacturer's documentation to perform this configuration.

The protocol used for communicating with the inverters is the USS protocol.
The speed of the RS485 communications port must be configured to 115200 baud.

Every inverter must be correctly configured before configuring the gateway.

At every restart, the gateway performs a search for inverters that are configured and present on the bus. That is why we recommend using methodical addressing without any gaps, beginning with address 1, and going up to address N.
Otherwise, the startup phase of the WebdynSun will take a longer time.

3.1 Discovering inverters

Discovery of inverters can be carried out via the built-in Web server or via a command file. The discovery process can provide the server with the list of the inverters available on the bus, but is not sufficient for data acquisition. For this purpose, it is imperative that the FTP server and the gateway be synchronised. For further details, please refer to the "Operating Manual" for the WebdynSun.

3.2 Inverter definition file

The role of this file is to describe the full set of variables available for an inverter.

For each variable, it describes:
- its retrieval method: used by the gateway to capture the data idem within the inverter;
- its processing method: average, instantaneous, parameter or alarm;
- its formatting: name, units and scaling coefficient.

This file is uploaded by the gateway after an inverter discovery phase. Some fields may be modified by the user.

The Siemens protocol allows each variable to be captured individually. On installation, the gateway uploads a default definition file containing the set of all variables available for each inverter. If you do not wish to collect all the variables from the inverter, it is advisable to select those you do want via this file. This is to reduce the volume of the uploaded data, and the collection time per inverter.

The data capture time for a Siemens inverter is 2 seconds, with no modifications to the definition file.

Filename format:
*IDSite_* INV_GENERIC.ini

Example of the description of a Siemens variable:

1;1106;0;8;AC-Power;W;1;0;2

- 2: action: min/max/average variable
- 0: scaling coefficient B
- 1: scaling coefficient A
- W: units for the variable
- AC-Power: variable name
- 8: variable type
- 0: Information on the variable capture request: PNU Index
- 1106: Information on the variable capture request: PNU
- 1: Index of the variable

XXXX: Parameter not user-modifiable

The action to be applied to each variable is specified at the end of the line:

- ***Action=0***: Variable not collected.
- ***Action=1***: Variable treated as read-only parameter.
- ***Action=2***: Min/max/avg values.
- ***Action=4***: Instantaneous value.
- ***Action=8***: Variable treated as an alarm.

Details of the definition file for a Siemens-PVM inverter:

```
1;1106;0;8;AC-Power;W;1;0;2
2;1123;0;8;AC-Voltage-Average;V;1;0;4
3;1121;0;8;AC-Voltage1-Peak;V;1;0;2
4;1121;1;8;AC-Voltage2-Peak;V;1;0;2
5;1121;2;8;AC-Voltage3-Peak;V;1;0;2
6;1124;0;8;AC-Current-Sum;A;1;0;4
7;1141;0;8;AC-Current-1;A;1;0;2
8;1141;1;8;AC-Current-2;A;1;0;2
9;1141;2;8;AC-Current-3;A;1;0;2
10;1122;0;8;AC-Frequency-1;Hz;1;0;2
11;1122;1;8;AC-Frequency-2;Hz;1;0;2
12;1122;2;8;AC-Frequency-3;Hz;1;0;2
13;1107;0;8;DC-Power;W;1;0;2
14;1104;0;8;DC-Voltage;V;1;0;2
15;1105;0;8;DC-Current;A;1;0;2
16;92;0;3;InternalTemp1;°C;0.1;0;2
17;92;1;3;InternalTemp2;°C;0.1;0;2
18;1191;0;3;Radiation;w/m2;0.1;0;0
19;1193;0;3;ExternalTemp;°C;0.1;0;0
20;1150;0;7;Daily-Yield;kWh;0.1;0;4
21;1151;0;7;Total-Yield;kWh;0.1;0;4
22;1152;0;7;Operating-Hours;h;0.01;0;4
23;501;0;3;Status;-;1;0;4
24;500;0;7;ErrorMessageCode;-;1;0;4
```

On the server side, the following columns should be used:
- *Name*: variable name.
- *Units*: units for the variable.
- *A and B*:
  - The coefficients A and B enable scaling of the collected data item. These coefficients should be applied by the server according to the following method:

    Let x be the reported value, and y the converted value:
    y=A.x+B

    Example:

    Scaling the variable “Total-Yield”, No. 21:

    21;1151;0;7;Total-Yield;kWh;0;1;0;4

    Reported value=425
    Units=kWh (kilowatt-hours).
    Coefficients: A=0.1, B=0
    Total Yield = (425 x 0.1) + 0=42.5 kWh.

4 Inverter parameter files

There are no parameters accessible via the Siemens USS protocol.

5 Inverter alarm files

An alarm is generated, then transmitted to the remote server in the form of a file on the FTP server (*IDSite*_AL_*YYMMDD_hhmmss*.csv.gz).
The data stored is also uploaded at the same time as an alarm.

Alarm of the INV type:
This type of alarm is uploaded on a change in the status of a variable defined as an alarm in the associated definition file.

Date–Time	Type	Field 1	Field 2	Field 3	Field 4

Where:

Date–Time	Timestamp when alarm triggered, in format YY/MM/DD-hh:mm:ss
Type	INV: Alarm type is Inverter
Field 1	*IDsite*_INV_*type*.ini: Name of reference definition file
Field 2	Serial number of the triggering inverter
Field 3	1 to N: Index of the triggering data item in the associated definition file.
Field 4	Status of the trigger item: 0 to n => Code corresponding to status messages or to messages indicating inverter malfunction.

Example:

25/10/11-06:30:02;INV; WD0047EC_INV_GENERIC.ini;ADDR1;23;2

Variable “Status” of inverter ADDR1 switched to 2.
Please see the manufacturer’s documentation for details of any variable.

Status: this field reflects the operational state of the inverter 0 initialisation 1 disabled 2 enabled 3 ready 4 in operation 5 stopped 6 temporarily unserviceable 7 unserviceable

Mechanism for censoring alarms

For status variables configured as alarms, it is possible to specify, in the definition file, which values are to be censored, i.e. for which an alarm report should not be uploaded, even though the action code is 8.

This mechanism means that an alarm is not uploaded if the value taken by a variable with an action code of 8 has been declared in the list of values to be ignored.

The list of values to be ignored is specific to each variable declared in the definition file with the action code Alarm (8), and is written in the field following that containing the Alarm action code.
The values to be censored are separated by the pipe symbol "|".

Example with the variable State:
The declaration line for this variable is in the definition file.

```
23;501;0;3;Status;-;1;0;8;0|1|2
```

In this case, if the variable switches to a value of 0 (initialisation), 1 (disabled) or 2 (enabled), the new value will indeed be saved to the data file, but no alarm will be uploaded.

6 Inverter command files

The Siemens USS protocol does not provide the facility to modify the parameters of Siemens or Refu inverters using a command file.