Appendix for SolarMax inverters: C, S, MT, and TS series and MaxComm, MaxMeteo, MaxCount devices

Interface RS485

WebdynSun

The monitoring gateway for your solar installation

CONTENTS

1 Introduction 3
2 Connecting the gateway to the inverters 3
2.1 Activating/deactivating the bus terminator plug: 3
2.2 Connecting inverters to the RS485 bus: 4
3 Configuring and declaring inverters 5
3.1 Discovering inverters 6
3.2 Declaring inverters 6
3.3 Definition files 6
4 Using inverter data 11
4.1 Data files 11
4.2 Parameter files 11
4.3 Alarm files 11
5 List of supported devices 11

1 Introduction

This appendix describes all the specific considerations involved in the protocol governing communication with SolarMax inverters over RS485. It complements the chapter “Inverter

management” of the WebdynSun Operating Manual MU_WebdynSun, available for download from our site http://www.webdynsun.com.

2 Connecting the gateway to the inverters

- All wiring must be carried out only by a specialised qualified electrician.
- Prior to installation, all equipment connected to the corresponding communications bus must be disconnected on both sides (DC and AC).
- Respect all safety recommendations appearing in inverter documentation.

Communication with the inverters is via a 2-wire RS485 bus in Half-Duplex mode. This is achieved through the use of the RS485(A) port on the WebdynSun, which is dedicated to inverters.

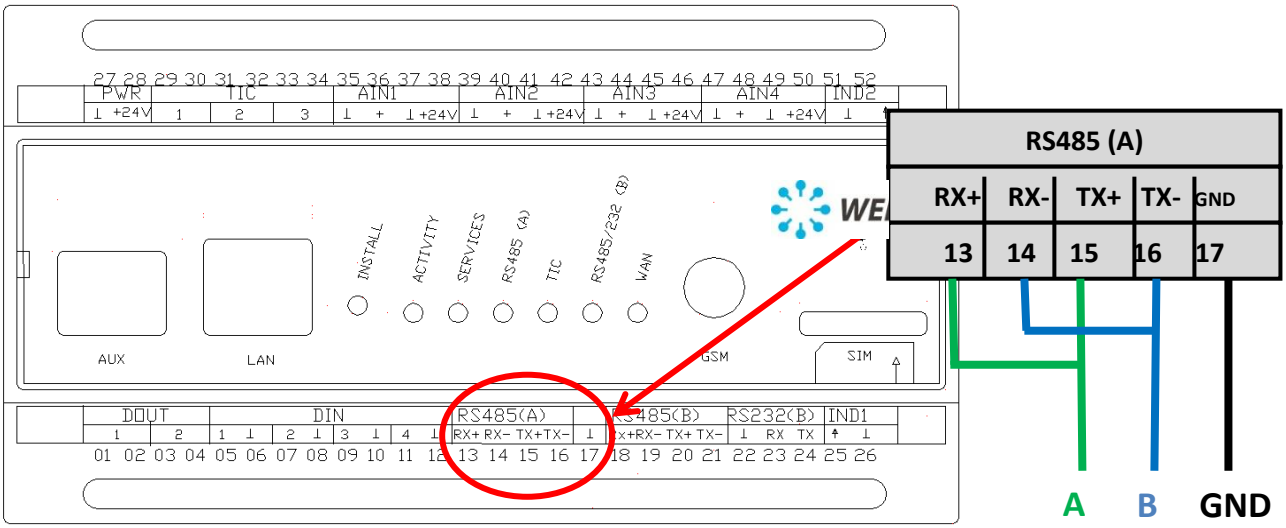

The WebdynSun can handle up to 100 inverters.

2.1 Activating/deactivating the bus terminator plug

The gateway may be located at the end of the RS485 communications bus or in the middle of the bus.

To ensure correct operation of the RS485 data bus, it must be fitted with a 120 ohm termination plug at both ends. Depending on the position of the gateway on the bus, this plug must be enabled or disabled via a pair of jumpers mounted inside the casing.

Before installing the WebdynSun unit, check that the bus terminator jumpers are correctly positioned.

> By default, the gateway is configured to be located at the end of a 4-wire RS485 bus. Consequently, the jumpers are plugged into the “Activation” position of the 120 ohm terminator plug.
> As the SolarMax bus has 2 wires, jumper JMP3 must be removed.

Only jumper JMP2 inside the casing must be positioned to activate the 120 ohm bus termination plug.

The terminator plug must be activated where the gateway is placed at the end of the RS485 bus, and deactivated where it is in the middle of the bus.

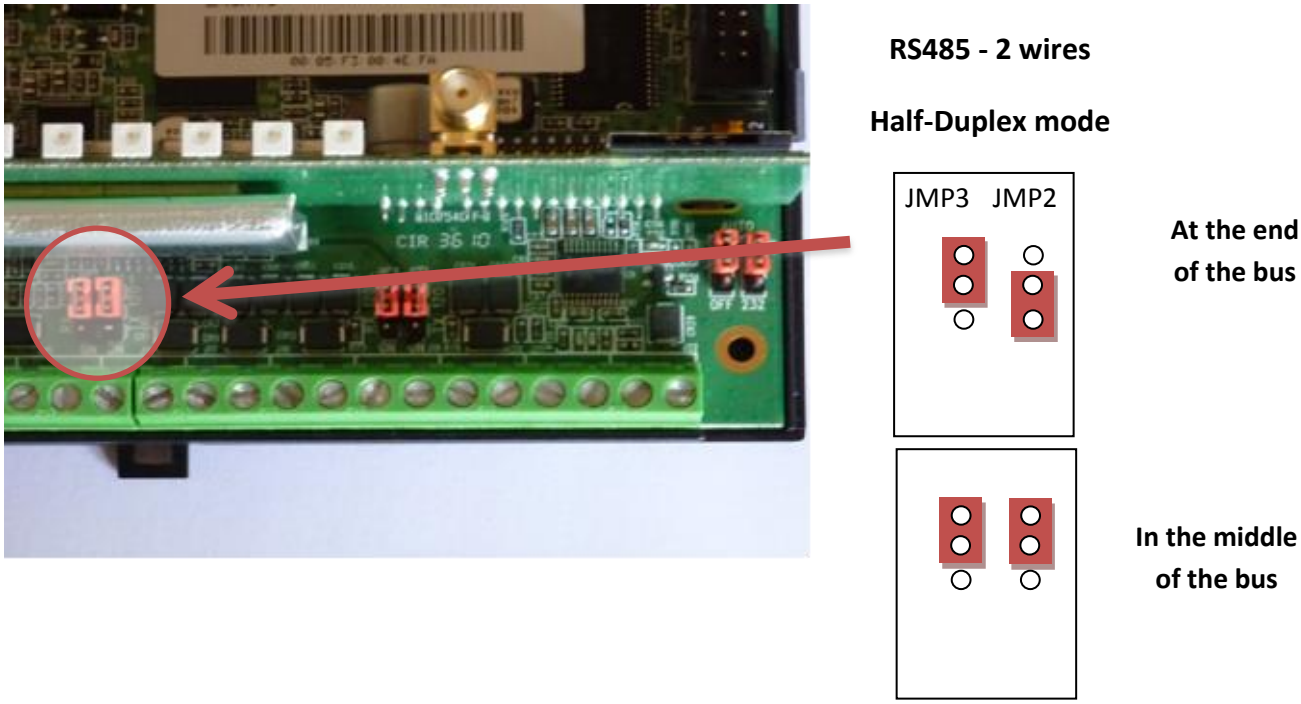

2.2 Connecting inverters to the RS485 bus

Consult the inverter documentation regarding the principles governing RS485 connection and wiring. Once the RS485 cable has been brought up to the gateway:

1. Strip around 4 cm of the outer sheath from the RS485 communications cable.
2. Trim the shielding back to match the cable sheath.
3. Bare around 6 mm of the wires.
4. Connect the conductors to the connector marked RS485(A), respecting the allocations in your RS485 communications bus.

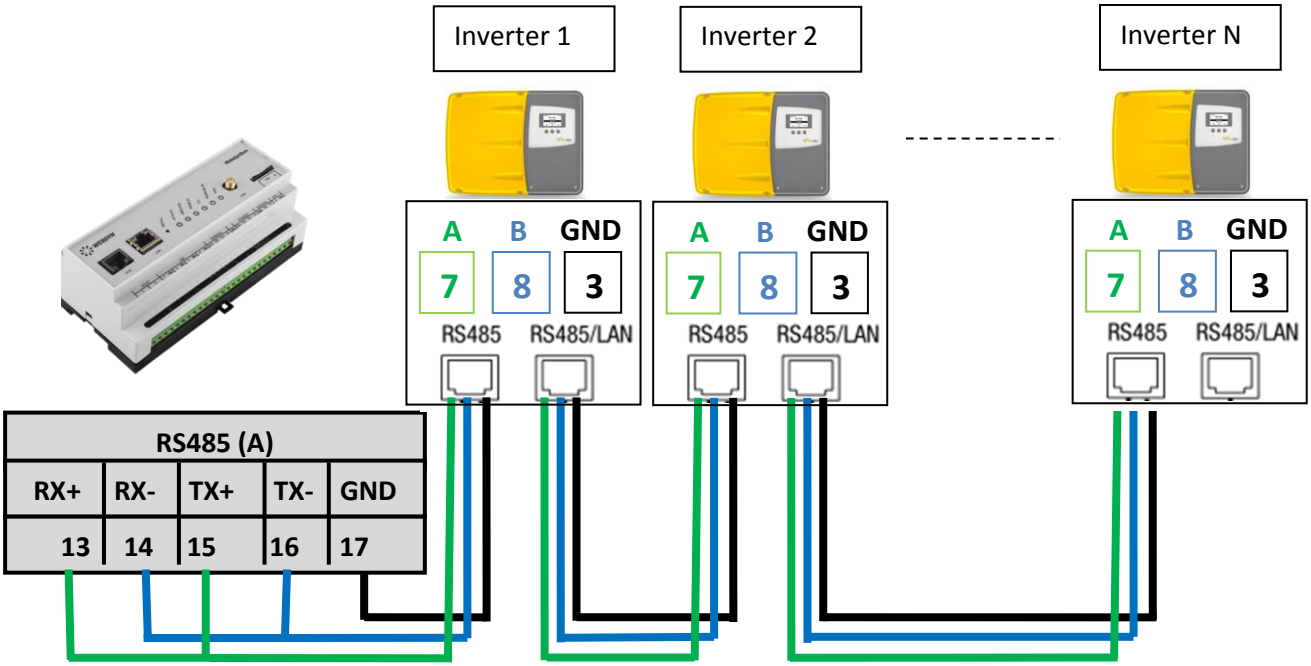

Pinout for the RJ45 connector on the RS485 link to the inverters:

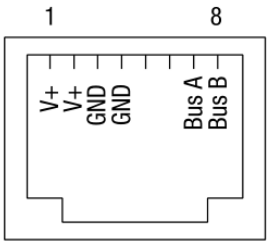

Pin	Function
1	V+(network power in)
2	V+(network power in)
3	GND
4	GND
5	-
6	-
7	Signal A / RS485 Data +
8	Signal B / RS485 Data -

3 Configuring and declaring inverters

Check that the parameter “INV_Type” in the configuration file *prefixID*_config.ini is correctly set before performing any configuration on the inverters. It should have the value 17 to select the inverter protocol “SolarMax – MaxComm”.

Each inverter must be configured manually with a unique network address, and have the Ethernet mode disabled. Please see the manufacturer’s documentation for an explanation of this configuration process.

3.1 Discovering inverters

Inverter discovery is possible via the MaxComm protocol, on condition that the inverters have already been configured with a unique network address.

During discovery of SolarMax, devices, the WebdynSun creates specific definition files for each inverter family. The rule for naming these files is: *prefixID*_INV_*deviceTypeNumber*.ini, where *deviceTypeNumber* corresponds to the inverter type.

The files *prefixID*_INV.ini, *prefixID*_daq.ini, and the definition files for the devices discovered will be uploaded to the remote server on the next FTP connection, unless they are already present on the server.

3.2 Declaring inverters

Inverters are declared via the configuration file *prefixID*_daq.ini. This file is automatically generated after the launch of the inverter discovery process.

The file *prefixID*_daq.ini should contain the information described below:

INV_SN[*index*]=ADDRx INV_FileDefName[*index*]=prefixID_INV_deviceTypeNumber.ini

Where:

index: Index of the INV unit declared (0 to 99). **ADDRx**: x (1 to 100), unique network address

Example:

INV_SN[0]=ADDR1 INV_FileDefName[0]=*prefixID*_INV_4EF0.ini INV_SN[1]=ADDR2 INV_FileDefName[1]=*prefixID*_INV_23.ini INV_SN[2]=ADDR3 INV_FileDefName[2]=*prefixID*_INV_4FB3.ini

⚠	The gateway will not begin to collect data as long as the *prefixID*_daq.ini and the generated definition files are not present on the remote FTP server.

3.3 Definition files

Each inverter is characterised by its definition file. These files are generated automatically by the WebdynSun during inverter discovery. They are uploaded to the remote FTP server by the gateway on its next connection. The files may be modified by the user as required.

Every parameter or variable to be collected is defined in the definition file, according to the following format:

index;port(*);key(*);format(*);name;unit;coefA;coefB;action

(*)Parameter not user modifiable

Where:

index: Index of the variable to be collected.
port: Port used for the inverter request.
key: Identifier of the variable to be collected.
format: Format of the variable to be collected.
name: Name of the variable to be collected.
unit: Units of the variable to be collected.
coefA and coefB: Scaling coefficients.
action: Action to be performed on the variable

0: Variable not collected
1: Variable treated as read-only parameter.
2: Min/max/avg values.
4: Instantaneous value.
8: Variable treated as an alarm.

For the definitions of the variables, please consult the inverter documentation.

Depending on the variable type, several actions are applicable:

Variable type	Variable format	Possible actions
Instantaneous variables	Numerical	0, 4
	Counter	0, 4
	Analogue	0, 2, 4
	Status	0, 4, 8
Parameters		0, 1

N.B. If the action defined is not consistent with the variable type, it is ignored.

There are six categories of definition files for the MaxComm protocol:

- String inverter, single phase (2000C, …,6000C,2000S,…,6000S).
- String inverter, three-phase (10MT…15MT).
- Central inverter type 1 (20C,…,300C,330C-SV,20S,...,35S).
- Central inverter type 2 (50TS,…,300TS,330TS-SV,…,1320TS-SV).
- MaxCount
- MaxMeteo

The files generated by default are:

String inverter, single phase (2000C, …,6000C,2000S,…,6000S)

```
1;100;ADR;05;Network address;-;1;0;1
2;100;TYP;06;Type;-;1;0;1
3;100;PAC;07;AC Power;W;0.5;0;4
4;100;KHR;07;Operating hours;h;1;0;4
5;100;KYR;07;Energy Year;kWh;1;0;4
6;100;KMT;07;Energy Month;kWh;1;0;4
7;100;KDY;07;Energy Day;kWh;0.1;0;4
8;100;KT0;07;Energy Total;kWh;1;0;4
9;100;PIN;07;Installed power;W;0.5;0;4
10;100;PRL;06;Relative power;%;1;0;4
11;100;UDC;06;Voltage DC;V;0.1;0;4
12;100;UL1;06;Voltage Phase 1;V;0.1;0;4
13;100;IDC;06;Current DC;A;0.01;0;4
14;100;IL1;06;Current Phase 1;A;0.01;0;4
15;100;TKK;06;Temperature;°C;1;0;4
16;100;SYS;06;Status code;-;1;0;8
```

String inverter, three-phase (10MT…15MT)

```
1;100;ADR;05;Network address;-;1;0;1
2;100;TYP;06;Type;-;1;0;1
3;100;PAC;07;AC Power;W;0.5;0;4
4;100;KHR;07;Operating hours;h;1;0;4
5;100;KYR;07;Energy Year;kWh;1;0;4
6;100;KMT;07;Energy Month;kWh;1;0;4
7;100;KDY;07;Energy Day;kWh;0.1;0;4
8;100;KT0;07;Energy Total;kWh;1;0;4
9;100;PIN;07;Installed power;W;0.5;0;4
10;100;PRL;06;Relative power;%;1;0;4
11;100;UDC;06;Voltage DC;V;0.1;0;4
12;100;UI1;06;Voltage L1-L2;V;0.1;0;4
13;100;UI2;06;Voltage L2-L3;V;0.1;0;4
14;100;UI3;06;Voltage L3-L1;V;0.1;0;4
15;100;IDC;06;Current DC;A;0.01;0;4
16;100;IL1;06;Current Phase 1;A;0.01;0;4
17;100;IL2;06;Current Phase 2;A;0.01;0;4
18;100;IL3;06;Current Phase 3;A;0.01;0;4
19;100;TKK;06;Temperature;°C;1;0;4
20;100;SYS;06;Status code;-;1;0;8
```

Central inverter type 1 (20C,…,300C,330C-SV,20S,...,35S)

```
1;100;ADR;05;Network address;-;1;0;1
2;100;TYP;06;Type;-;1;0;1
3;100;PAC;07;AC Power;W;0.5;0;4
4;100;KHR;07;Operating hours;h;1;0;4
5;100;KYR;07;Energy Year;kWh;1;0;4
6;100;KMT;07;Energy Month;kWh;1;0;4
7;100;KDY;07;Energy Day;kWh;0.1;0;4
8;100;KT0;07;Energy Total;kWh;1;0;4
9;100;PIN;07;Installed power;W;0.5;0;4
10;100;PRL;06;Relative power;%;1;0;4
11;100;UDC;06;Voltage DC;V;0.1;0;4
12;100;UD01;06;Voltage DC Tracker 1;V;0.1;0;4
13;100;UD02;06;Voltage DC Tracker 2;V;0.1;0;4
14;100;UD03;06;Voltage DC Tracker 3;V;0.1;0;4
15;100;UL1;06;Voltage Phase 1;V;0.1;0;4
16;100;UL2;06;Voltage Phase 2;V;0.1;0;4
17;100;UL3;06;Voltage Phase 3;V;0.1;0;4
18;100;IDC;06;Current DC;A;0.01;0;4
19;100;ID01;06;Current DC Tracker 1;A;0.01;0;4
20;100;ID02;06;Current DC Tracker 2;A;0.01;0;4
21;100;ID03;06;Current DC Tracker 3;A;0.01;0;4
22;100;IL1;06;Current Phase 1;A;0.01;0;4
23;100;IL2;06;Current Phase 2;A;0.01;0;4
24;100;IL3;06;Current Phase 3;A;0.01;0;4
25;100;TKK;06;Temperature;°C;1;0;4
26;100;SYS;06;Status code;-;1;0;8
```

Central inverter type 2 (50TS,…,300TS,330TS-SV,…,1320TS-SV)

```
1;100;ADR;05;Network address;-;1;0;1
2;100;TYP;06;Type;-;1;0;1
3;100;PAC;07;AC Power;W;0.5;0;4
4;100;KHR;07;Operating hours;h;1;0;4
5;100;KYR;07;Energy Year;kWh;1;0;4
6;100;KMT;07;Energy Month;kWh;1;0;4
7;100;KDY;07;Energy Day;kWh;0.1;0;4
8;100;KT0;07;Energy Total;kWh;1;0;4
9;100;PIN;07;Installed power;W;0.5;0;4
10;100;PRL;06;Relative power;%;1;0;4
11;100;UDC;06;Voltage DC;V;0.1;0;4
12;100;UL1;06;Voltage Phase 1;V;0.1;0;4
13;100;UL2;06;Voltage Phase 2;V;0.1;0;4
14;100;UL3;06;Voltage Phase 3;V;0.1;0;4
15;100;IDC;06;Current DC;A;0.01;0;4
16;100;IL1;06;Current Phase 1;A;0.01;0;4
17;100;TKK;06;Temperature;°C;1;0;4
18;100;SYS;06;Status code;-;1;0;8
```

MaxCount

```
1;100;ADR;05;Network address;-;1;0;1
2;100;TYP;06;Type;-;1;0;1
3;100;I1Y;07;Pulse counter 1 Year;kWh;0.1;0;4
4;100;I1P;07;Pulse counter 1 Power;W;0.5;0;4
5;100;I1S;07;Pulse counter 1 Scaling;pulse/kWh;1;0;4
6;100;I1D;07;Pulse counter 1 Day;kWh;0.1;0;4
7;100;I1T;07;Pulse counter 1 Total;kWh;0.1;0;4
8;100;I2Y;07;Pulse counter 2 Year;kWh;0.1;0;4
9;100;I2P;07;Pulse counter 2 Power;W;0.5;0;4
10;100;I2S;07;Pulse counter 2 Scaling;pulse/kWh;1;0;4
11;100;I2D;07;Pulse counter 2 Day;kWh;0.1;0;4
12;100;I2T;07;Pulse counter 2 Total;kWh;0.1;0;4
```

MaxMeteo

```
1;100;ADR;05;Network address;-;1;0;1
2;100;TYP;06;Type;-;1;0;1
3;100;RYR;07;Solar energy Year;kWh/m2;0.1;0;4
4;100;RDY;07;Solar energy Day;kWh/m2;0.1;0;4
5;100;RT0;07;Solar energy Total;kWh/m2;0.1;0;4
6;100;RAD;07;Solar irradiation;W/m2;1;0;4
7;100;TSZ;03;Temperature;°C;1;0;4
```

4 Using inverter data

4.1 Data files

SolarMax inverter data files comply with the format described in the WebdynSun Operating Manual.

4.2 Parameter files

SolarMax inverter data files comply with the format described in the WebdynSun Operating Manual.

4.3 Alarm files

All variables defined with an Action field of 8 in the definition file generate an alarm when they change status.

Special case of the variable "Status Code" identified by the code KeySYS:
A particular feature of this variable is that it provides the operating status of the inverter as well as reporting possible inverter faults. To avoid too many alarms being uploaded to the remote server, only status codes that are greater than 20100 can trigger alarms.
Please contact the manufacturer for full details of the meanings of inverter error codes.

5 List of supported devices

SolarMax 2000C
SolarMax 3000C
SolarMax 4000C
SolarMax 4200C
SolarMax 6000C
SolarMax 2000S
SolarMax 3000S
SolarMax 4200S
SolarMax 6000S
SolarMax 10MT (exists in parallel to 10MT2)
SolarMax 13MT (renamed to SolarMax 13MT3)
SolarMax 15MT (renamed to SolarMax 15MT3)
SolarMax 10MT2
SolarMax 13MT2
SolarMax 15MT2
SolarMax 13MT3
SolarMax 15MT3
SolarMax 20C
SolarMax 25C
SolarMax 30C

SolarMax 35C
SolarMax 50C
SolarMax 80C
SolarMax 100C
SolarMax 300C
SolarMax 330C-SV
SolarMax 20S
SolarMax 35S
SolarMax 50TS
SolarMax 80TS
SolarMax 100TS
SolarMax 300TS ST
SolarMax 300TS MT
SolarMax 330TS-SV ST
SolarMax 330TS-SV MT
SolarMax 660TS-SV ST
SolarMax 660TS-SV MT
SolarMax 990TS-SV ST
SolarMax 990TS-SV MT
SolarMax 1320TS-SV ST 20412
SolarMax 1320TS-SV MT 20512
MaxCount
MaxMeteo