Appendix for ABB/PowerOne

WebdynSun

The monitoring gateway for your solar installation

CONTENTS

1 Connecting the gateway to ABB/PowerOne inverters via the RS485(A) communications bus 3
1.1 Connecting at the end of the bus 3
1.2 Connecting in the middle of the bus 5
2 Discovering ABB/PowerOne inverter network and file IDsite_daq.ini 7
3 Definition files for ABB/PowerOne inverter families 8
4 Status variables 10
5 ABB/PowerOne inverter alarm files 12
6 ABB/PowerOne inverter parameter files 13
7 ABB/PowerOne inverter parameter modification command files 14

1 Connecting the gateway to ABB/PowerOne inverters via the RS485(A) communications bus

This chapter describes the connection of the WebdynSun to the RS485 communications bus for communication with ABB/PowerOne inverters in the Aurora ranges (except Central Inverters).
The gateway may be connected at the end of the RS485 communications bus or in the middle of the bus.
The gateway can handle up to 32 ABB/PowerOne inverters.

⚠	▪ All wiring must be carried out only by a specialised qualified electrician. ▪ Prior to installation, all equipment connected to the corresponding communications bus must be disconnected on both sides (DC and AC). ▪ Respect all safety recommendations appearing in inverter documentation.

To ensure correct operation of the RS485 data bus, it must be fitted with a 120 ohm termination resistor at both ends.
Depending on the position of the gateway on the bus, this terminator plug must be activated or deactivated via a pair of jumpers mounted inside the casing.

1.1 Connecting at the end of the bus

Positions of the JMP2 and JMP3 jumpers:
Only the JMP2 jumper inside the casing needs to be set to activate the 120 ohm bus terminator plug.

ℹ	By default, the gateway is configured to be located at the end of a 4–wire RS485 bus. Consequently, the jumpers are plugged into the “Activation” position of the 120 ohm terminator. As the ABB/PowerOne bus is a 2–wire bus, the JMP3 jumper must be removed.

Hardware version 1:

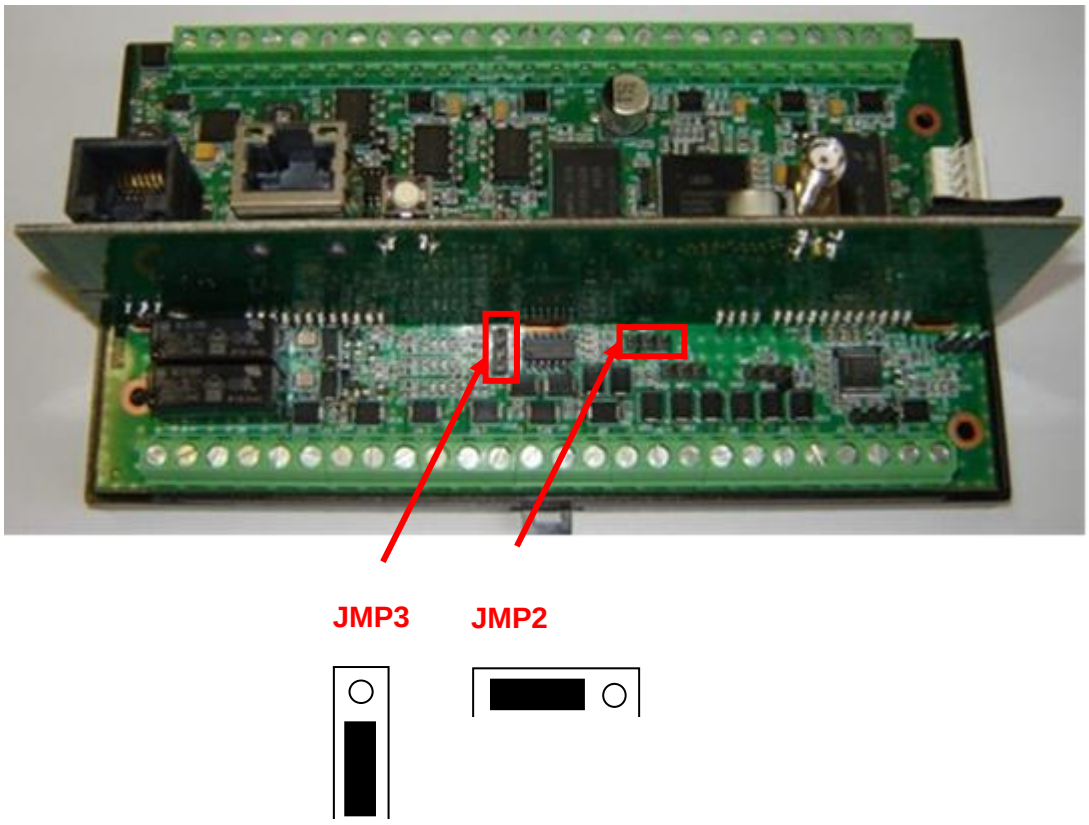

Hardware version 2:

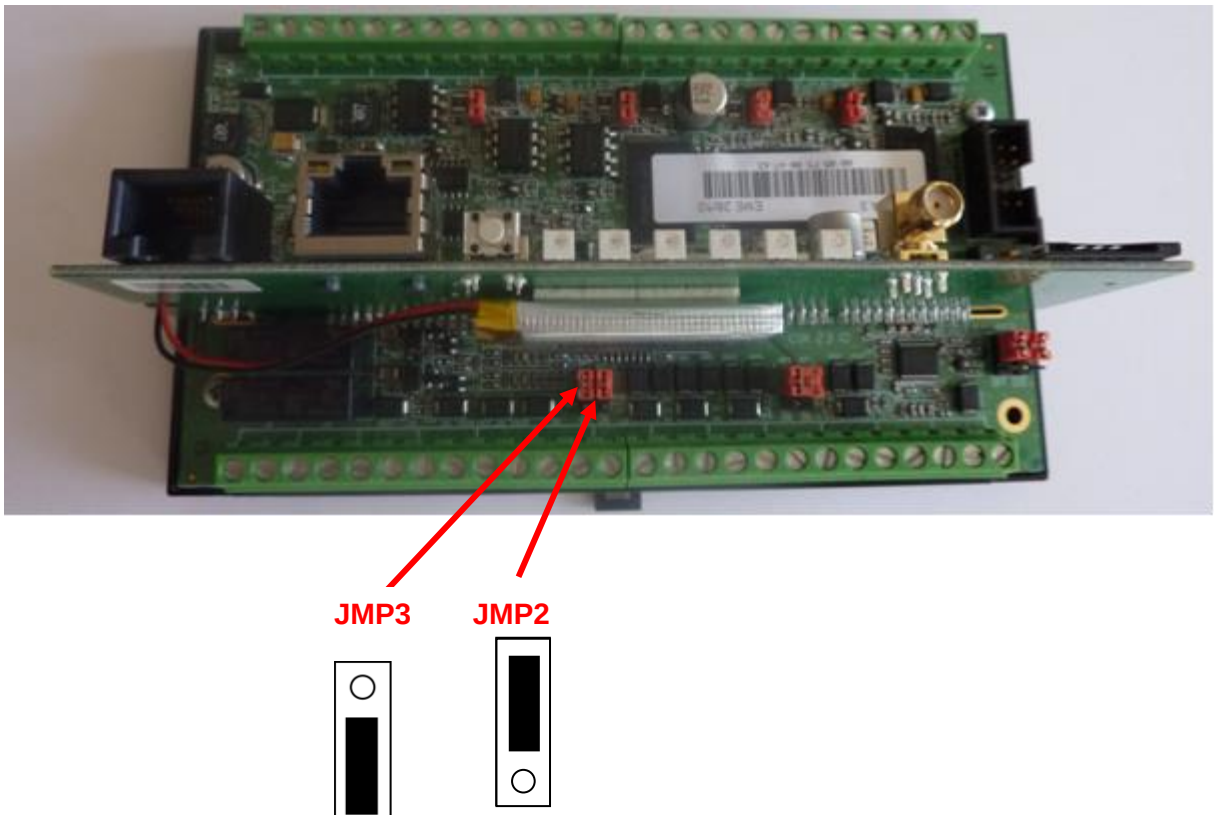

Connecting inverters to the RS485 bus:
Consult the inverter documentation regarding the principles governing RS485 connection and wiring.

Once the RS485 cable has been brought up to the gateway:

1. Strip around 4 cm of the outer sheath from the RS485 communications cable.
2. Trim the shielding back to match the cable sheath.
3. Bare around 6 mm of the wires.
4. Connect the conductors to the connector marked RS485(A), respecting the allocations in your RS485 communications bus.

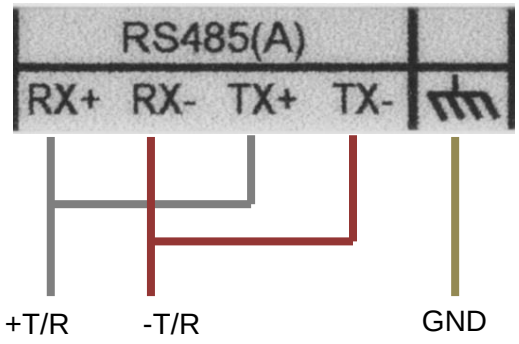

1.2 Connecting in the middle of the bus

Positions of the JMP2 and JMP3 jumpers:
Both the JMP2 and the JMP3 jumpers inside the casing must be positioned so as to deactivate the 120 ohm bus terminator plug.

Hardware version 1:

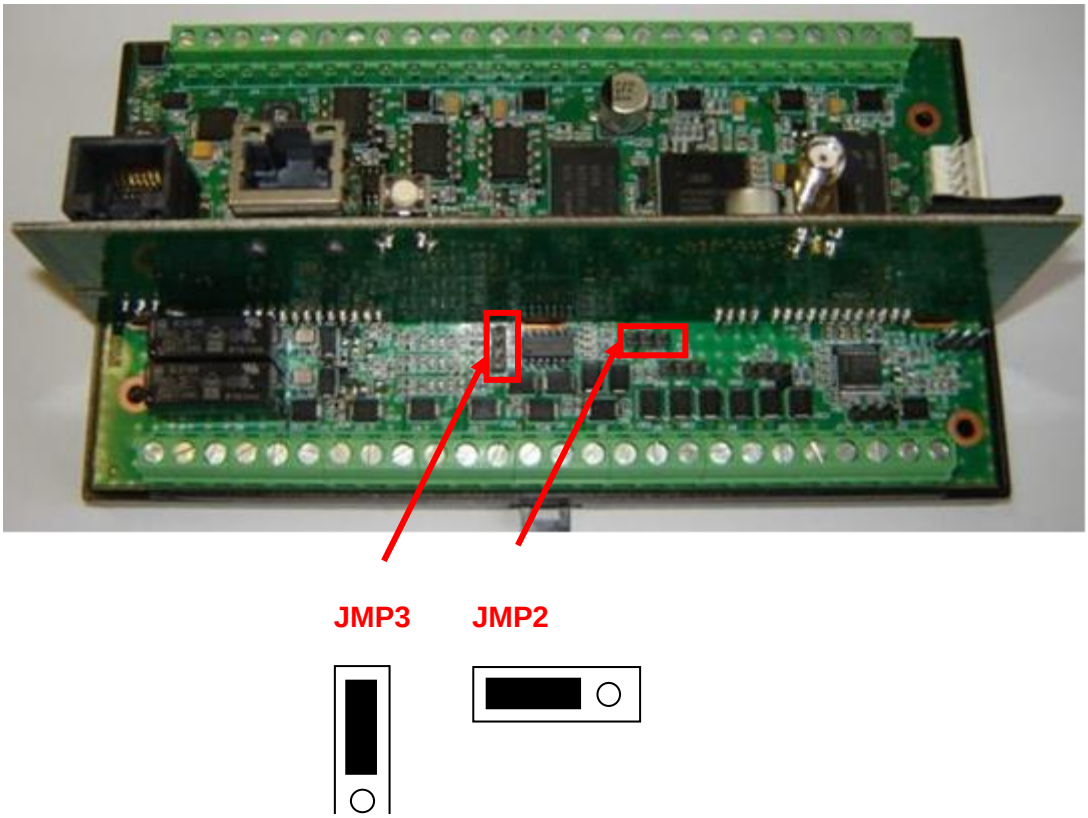

Hardware version 2:

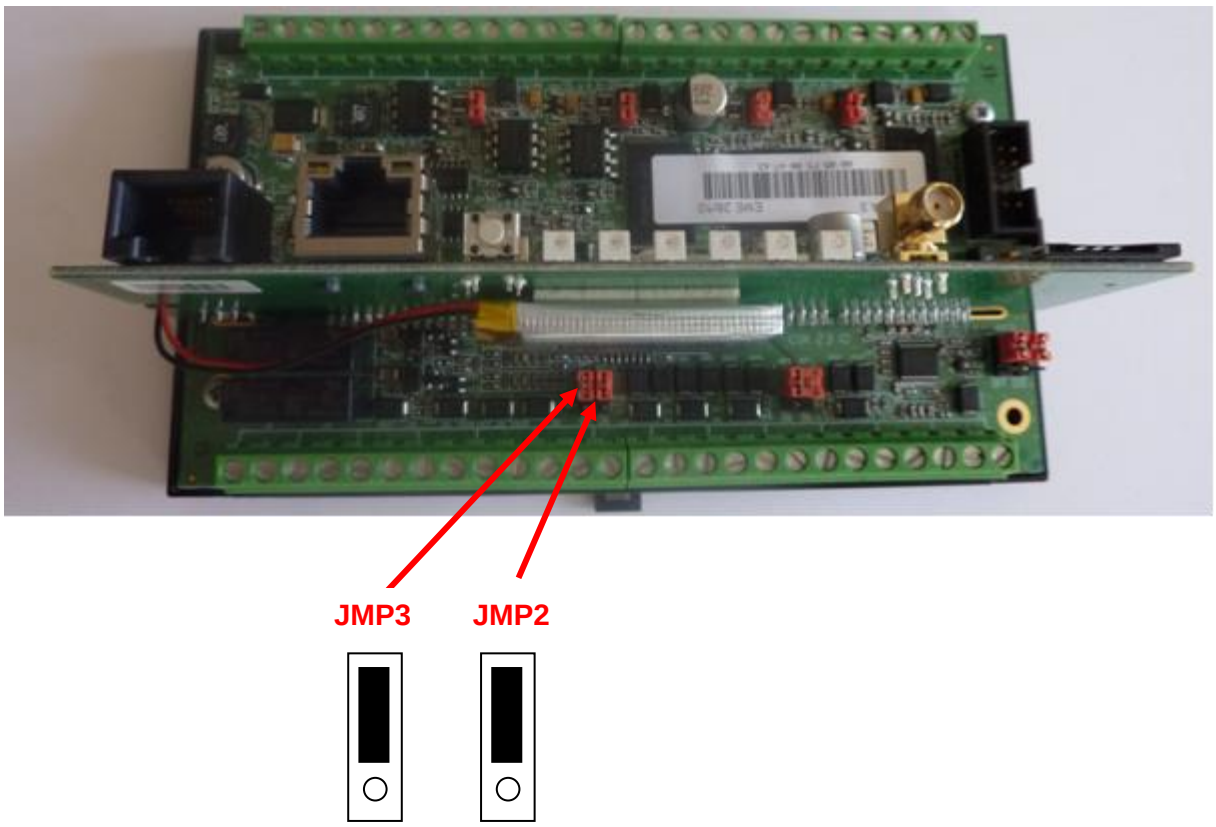

Connecting inverters to the RS485 bus:
Consult the inverter documentation regarding the principles governing RS485 connection and wiring.
Once the two RS485 cables have been brought up to the gateway:

1. Strip around 4 cm of the outer sheath from the RS485 communications cable.
2. Trim the shielding back to match the cable sheath.
3. Bare around 6 mm of the wires.
4. Connect the conductors to the connector marked RS485(A), respecting the allocations in your RS485 communications bus.

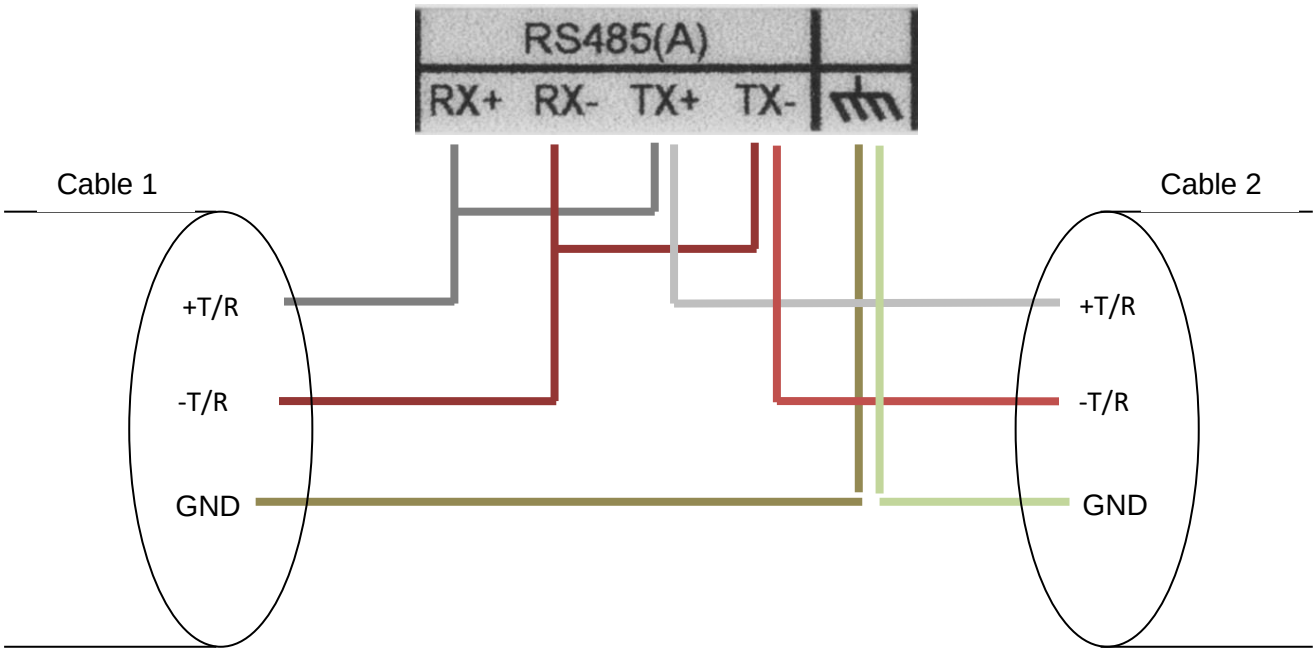

2 Discovering ABB/PowerOne inverter network and file IDsite_daq.ini

The ABB/PowerOne protocol allows for the discovery and addressing of inverters.

This discovery can be done via the built-in Web server or via a command file.

Following this discovery, if a connection is made and there is no *IDSite*_daq.ini file present in the /CONFIG directory of the FTP server, an *IDsite*_daq.ini file containing the declarations of all the inverters discovered will be generated automatically, then uploaded to the server.

A definition file corresponding to each inverter is generated during the discovery phase, and is used to provide information for the automatically generated *IDsite*_daq.ini file.
The definition files are also uploaded during the connection, if they are not already present on the server.

3 Definition files for ABB/PowerOne inverter families

Filename format:
*IDSite*_ INV_*Family*.ini

This file is uploaded by the gateway after an inverter discovery phase. It may be modified by the user.
IDSite: site identification number.
Family: inverter family.

Example:

```
1;63;0;0;SerialNumber;-;0;0;1
2;52;0;0;PartNumber;-;0;0;1
3;58;0;0;Version;-;0;0;1
4;65;0;0;FabDate;-;0;0;1
5;72;0;0;Firmware;-;0;0;1
6;50;1;0;GbState;-;0;0;4
7;50;2;0;Inv_State;-;0;0;4
8;50;3;0;DCchanel_1;-;0;0;4
9;50;4;0;DCchanel_2;-;0;0;4
10;50;5;0;Alarm;-;0;0;8
11;70;0;0;Time;s;0;0;4
12;59;1;0;Grid Voltage;V;0;0;2
13;59;2;0;Grid Current;A;0;0;2
14;59;3;0;Grid Power;W;0;0;2
15;59;4;0;Frequency;Hz;0;0;2
16;59;5;0;Vbulk;V;0;0;2
17;59;6;0;Ileak(Dc/Dc);A;0;0;2
18;59;7;0;Ileak(Inverter);A;0;0;2
19;59;8;0;Pin 1;W;0;0;2
20;59;9;0;Pin 2;W;0;0;2
21;59;21;0;Inverter Temperature;°C;0;0;2
22;59;22;0;Booster Temperature;°C;0;0;2
23;59;23;0;Input 1 Voltage;V;0;0;2
24;59;25;0;Input 1 Current;A;0;0;2
25;59;26;0;Input 2 Voltage;V;0;0;2
26;59;27;0;Input 2 Current;A;0;0;2
27;59;28;0;Grid Voltage (Dc/Dc);V;0;0;2
28;59;29;0;Grid Frequency (Dc/Dc);Hz;0;0;2
29;59;30;0;Isolation Resistance (Riso);-;0;0;2
30;59;31;0;Vbulk (Dc/Dc);V;0;0;2
31;59;32;0;Average Grid Voltage (VgridAvg);V;0;0;2
32;59;33;0;VbulkMid;V;0;0;2
33;59;34;0;Power Peak;W;0;0;2
34;59;35;0;Power Peak Today;W;0;0;2
35;59;36;0;Grid Voltage neutral;V;0;0;2
36;59;37;0;Wind Generator Frequency;Hz;0;0;2
37;59;38;0;Grid Voltage neutral-phase;V;0;0;2
38;59;39;0;Grid current phase R;A;0;0;2
```

```
39;59;40;0;Grid current phase S;A;0;0;2
40;59;41;0;Grid current phase t;A;0;0;2
41;59;42;0;Frequency phase R;Hz;0;0;2
42;59;43;0;Frequency phase S;Hz;0;0;2
43;59;44;0;Frequency phase t;Hz;0;0;2
44;59;45;0;Vbulk +;V;0;0;2
45;59;46;0;Vbulk -;V;0;0;2
46;59;47;0;Supervisor Temperature;°C;0;0;2
47;59;48;0;Supply Temperature;°C;0;0;2
48;59;49;0;Heat Sink Temperature;°C;0;0;2
49;59;50;0;Temperature 1;°C;0;0;2
50;59;51;0;Temperature 2;°C;0;0;2
51;59;52;0;Temperature 3;°C;0;0;2
52;59;53;0;Fan 1 speed;rpm;0;0;2
53;59;54;0;Fan 2 speed;rpm;0;0;2
54;59;55;0;Fan 3 speed;rpm;0;0;2
55;59;56;0;Fan 4 speed;rpm;0;0;2
56;59;57;0;Fan 5 speed;rpm;0;0;2
57;59;58;0;Power Saturation limit (Der.);W;0;0;2
58;59;59;0;Bulk Reference Ring;-;0;0;2
59;59;60;0;Vpanel micro;V;0;0;2
60;59;61;0;Grid voltage phase r;V;0;0;2
61;59;62;0;Grid voltage phase s;V;0;0;2
62;59;63;0;Grid voltage phase t;V;0;0;2
63;78;0;0;Daily Energy;Wh;0;0;4
64;78;1;0;Weekly Energy;Wh;0;0;4
65;78;3;0;Month Energy;Wh;0;0;4
66;78;4;0;Year Energy;Wh;0;0;4
67;78;5;0;Total Energy;Wh;0;0;4
68;78;6;0;Partial Energy;Wh;0;0;4
```

These files cover all the channels on the inverter, with:
Index;Command;Arg1;Arg2;Name;Units;A;B;**Action**

> ⚠ **It is not necessary to understand the fields Command, Arg1 or Arg2 to be able to operate the WebdynSun. These fields enable the gateway to find the variable using the information from the ABB/PowerOne protocol.**
> **These are the only fields that must under no circumstances be modified.**

The action to be applied to each variable is specified at the end of the line:

- ***Action=0***: Variable not collected.
- ***Action=1***: Variable treated as read-only parameter.
- ***Action=2***: Min/max/avg values.
- ***Action=4***: Instantaneous value.
- ***Action=8***: Variable treated as an alarm.

N.B. Depending on the variable type, several actions are applicable:

Variable type	Variable format	Possible actions
Instantaneous variables	Time (cmd70)	0, 4
	Cumulative (cmd78)	0, 4
	Analogue (cmd=59)	0, 2, 4
	Status (cmd=50)	0, 4, 8
Parameters		0, 1

N.B. If the action defined is not consistent with the variable type, it is ignored.

4 Status variables

The following tables provide information on the codes for the Status variables (cmd 50)

- 6;50;1;0;GbState;-;0;0;4
- 7;50;2;0;Inv_State;-;0;0;4
- 8;50;3;0;DCchanel_1;-;0;0;4
- 9;50;4;0;DCchanel_2;-;0;0;4
- 10;50;5;0;Alarm;-;0;0;8

This information is an extract from the ABB/PowerOne document:
AuroraCommunicationProtocol_4_2_PUBLIC.pdf (Aurora PV Inverter Series Communication Protocol rel.4.2).

	Global State		DcDc State		Inverter State
0	Sending Parameters	0	DcDc OFF	0	Stand By
1	Wait Sun/Grid	1	Ramp Start	1	Checking Grid
2	Checking Grid	2	MPPT	2	Run
3	Measuring Riso	3	Not Used	3	Bulk OV
4	DcDc Start	4	Input OC	4	Out OC
5	Inverter Start	5	Input UV	5	IGBT Sat
6	Run	6	Input OV	6	Bulk UV
7	Recovery	7	Input Low	7	Degauss Error
8	Pause 8 No Parameters	8	No Parameters		
9	Ground Fault	9	Bulk OV	9	Bulk Low
10	OTH Fault	10	Communication Error	10	Grid OV
11	Address Setting	11	Ramp Fail	11	Communication Error
12	Self Test	12	Internal Error	12	Degaussing
13	Self Test Fail	13	Input mode Error	13	Starting
14	Sensor Test + Meas.Riso	14	Ground Fault	14	Bulk Cap Fail
15	Leak Fault	15	Inverter Fail	15	Leak Fail
16	Waiting for manual reset	16	DcDc IGBT Sat	16	DcDc Fail
17	Internal Error E026	17	DcDc ILEAK Fail	17	Ileak Sensor Fail
18	Internal Error E027	18	DcDc Grid Fail	18	SelfTest: relay inverter

19	Internal Error E028	19	DcDc Comm. Error	19	SelfTest: wait for sensor test
20	Internal Error E029			20	SelfTest: test relay DcDc +sensor
21	Internal Error E030			21	SelfTest: relay inverter fail
22	Sending Wind Table			22	SelfTest timeout fail
23	Failed Sending table			23	SelfTest: relay DcDc fail
24	UTH Fault			24	Self Test 1
25	Remote OFF			25	Waiting self test start
26	Interlock Fail			26	Dc Injection
27	Executing Autotest			27	Self Test 2
30	Waiting Sun			28	Self Test 3
31	Temperature Fault			29	Self Test 4
32	Fan Staucked			30	Internal Error
33	Int. Com. Fault			31	Internal Error
34	Slave Insertion			40	Forbidden State
35	DC Switch Open			41	Input UC
36	TRAS Switch Open			42	Zero Power
37	MASTER Exclusion			43	Grid Not Present
38	Auto Exclusion			44	Waiting Start
98	Erasing Internal EEPROM			45	MPPT
99	Erasing External EEPROM			46	Grid Fail
100	Counting EEPROM			47	Input OC
101	Freeze				

Alarm State					
Value	Description	Code	Value	Description	Code
0	No Alarm		32	Grid OV	W004
1	Sun Low	W001	33	Grid UV	W005
2	Input OC	E001	34	Grid OF	W006
3	Input UV	W002	35	Grid UF	W007
4	Input OV	E002	36	Z grid Hi	W008
5	Sun Low	W001	37	Internal error	E024
6	No Parameters	E003	38	Riso Low	E025
7	Bulk OV	E004	39	Vref Error	E026
8	Comm.Error	E005	40	Error Meas V	E027
9	Output OC	E006	41	Error Meas F	E028
10	IGBT Sat	E007	42	Error Meas Z	E029
11	Bulk UV	W011	43	Error Meas Ileak	E030
12	Internal error	E009	44	Error Read V	E031
13	Grid Fail	W003	45	Error Read I	E032
14	Bulk Low	E010	46	Table fail	W009
15	Ramp Fail	E011	47	Fan Fail	W010
16	Dc/Dc Fail	E012	48	UTH	E033
17	Wrong Mode	E013	49	Interlock fail	E034
18	Ground Fault	---	50	Remote Off	E035
19	Over Temp.	E014	51	Vout Avg errror	E036

20	Bulk Cap Fail	E015	52	Battery low	W012
21	Inverter Fail	E016	53	Clk fail	W013
22	Start Timeout	E017	54	Input UC	E037
23	Ground Fault	E018	55	Zero Power	W014
24	Degauss error	---	56	Fan Stucked	E038
25	Ileak sens.fail	E019	57	DC Switch Open	E039
26	DcDc Fail	E012	58	Tras Switch Open	E040
27	Self Test Error 1	E020	59	AC Switch Open	E041
28	Self Test Error 2	E021	60	Bulk UV	E042
29	Self Test Error 3	E019	61	Autoexclusion	E043
30	Self Test Error 4	E022	62	Grid df/dt	W015
31	DC inj error	E023	63	Den switch Open	W016
			64	Jbox fail	W017

5 ABB/PowerOne inverter alarm files

An alarm is generated, then transmitted to the remote server in the form of a file on the FTP server (*IDSite*_AL_*YYMMDD_hhmmss*.csv.gz).
The data stored is also uploaded at the same time as an alarm.

N.B. See 4. Status variables, for an explanation of the alarm codes.

Alarm of the ABB/PowerOne type:
This type of alarm is raised on a change in the status of a variable defined as an alarm in the associated definition file.

Date - Time	Type	Field 1	Field 2	Field 3	Field 4

Where:

Date–Time	Timestamp when alarm triggered, in format YY/MM/DD-hh:mm:ss
Type	INV: Alarm type is ABB/PowerOne
Field 1	*IDsite*_INV_*family*.ini: Name of reference definition file
Field 2	Serial number of the triggering ABB/PowerOne inverter
Field 3	1 to N: Index of the triggering data item in the associated definition file.
Field 4	Status of the trigger item: 0 to n => Code corresponding to status messages or to messages indicating inverter malfunction.

Example:

09/10/09-08:45:38;INV;WEBDYN01_INV_iFNN.ini; 106367;10;1

Mechanism for censoring alarms

For status variables configured as alarms, it is possible to specify, in the definition file, which values are to be censored, i.e. for which an alarm report should not be uploaded, even though the action code is 8.

This mechanism means that an alarm is not uploaded if the value taken by a variable with an action code of 8 has been declared in the list of values to be ignored.

The list of values to be ignored is specific to each variable declared in the definition file with the action code Alarm (8), and is written in the field following that containing the Alarm action code.
The values to be censored are separated by the pipe symbol "|".

Example with the variable Inverter State:
The declaration line for this variable is in the definition file.

```
7;50;2;0;Inv_State;-;0;0;4;15|16|30
```

In this case, if the variable switches to a value of 15 (Leak Fail), 16 (DcDc Fail) or 30 (Internal Error), the new value will indeed be saved to the data file, but no alarm will be uploaded.

6 ABB/PowerOne inverter parameter files

Filename format:
*IDSite*_INV_P_*AAMMJJ_hhmmss*.csv.gz
Where:
IDSite: gateway identifier.

The parameters of the inverters present on the network are sent to the FTP server in two cases:

- During the installation phase triggered by pressing the push-button on the gateway;
- Via a command file of the type GATEWAY: Send inverter parameters (*see chapter on managing command files in the Operating Manual*).

The file format is as follows: (fields in green are optional data that can be enabled or disabled in *IDSite*_daq.ini (see section *7.3* in the User's Manual)).

```
SNINV;106367;1;
TypeINV;WD0047EC_INV_iFNN.ini;
5;1;2;3;4;5;
16/11/10-15:23:54;106367;-3D26-;iFNN;1610;F134;
SNINV;106367;2;
TypeINV;WD0047EC_INV_iFNN.ini;
5;1;2;3;4;5;
16/11/10-15:23:55;106367;-3D26-;iFNN;1610;F134;
```

For each inverter, this file details the variables defined as parameters in the file *IDSite*_INV_*family*.ini *(see Chapter 3: Definition files for ABB/PowerOne inverter families)*.

SNINV = Serial number of inverter n (n=0 to 99).
TypeINV = Family of inverter n.

The column heading ";1;2;3;4;5;…;" is added if the option (DAQ_HeaderOption) is enabled in *IDSite*_daq.ini (see section *7.3* in the User's Manual).

To minimise the sizes of transmitted files, the parameter file is compressed in .gz format.

7 ABB/PowerOne inverter parameter modification command files

It is not possible to modify the parameters of ABB/PowerOne inverters using a command file.