webdyn
flexitron group

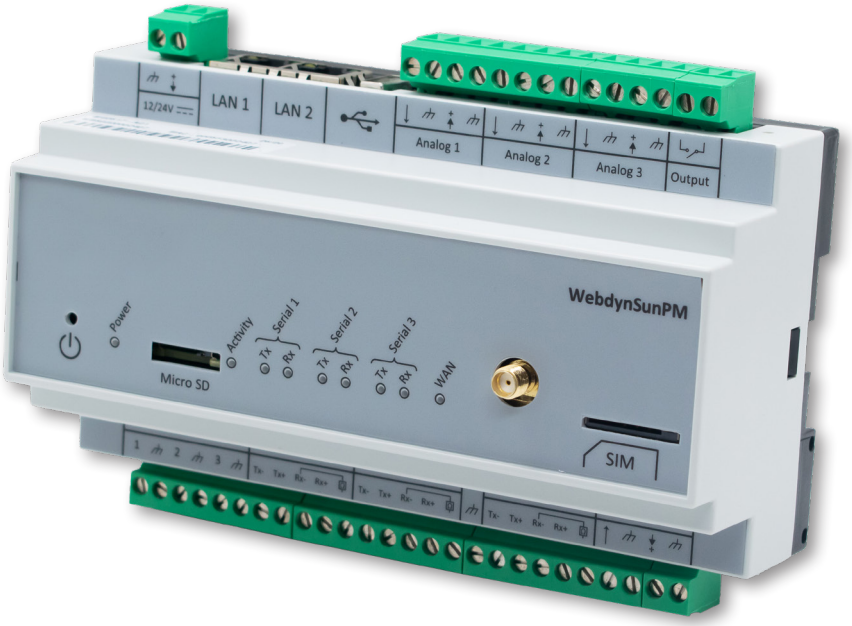

Annex

Delta

www.webdyn.com

Index

Delta

1. Supported devices

Delta Inverters are compatible with the following protocols used by the WebdynSunPM:

Inverter protocol	Physical interface	Specifications
Delta-Solivia	RS485 2 wires	100 max
SunSpec (Modbus RTU)	RS485 2 wires	247 max

For the Delta-Solivia proprietary protocol, Delta Energy Systems inverter communication protocol version 0.37 has been implemented on the WebdynSunPM product.

On the same physical RS485 interface, the connected inverters must have the same protocol and the same serial configuration.

The maximum number of supported devices may be influenced by the number of variables to be communicated.

The communication protocols are only in RTU mode (RS485) and may be different for different Delta inverter models. The model is indicated on the label on each inverter. (see its location in the inverter manual).

Inverter model	Delta solivia	Sunspec
Solivia G3	Yes	
Solivia G4	Yes	
RPI HxA	Yes	
HXA_2XX	Yes	
M6A	Yes	Yes
M8A	Yes	Yes
M10A	Yes	Yes
M15A	Yes	Yes
M20A	Yes	Yes
M30A	Yes	Yes
M50A	Yes	Yes
M70A		Yes
M88H		Yes
M125HV		Yes

The inverters with the Delta-solivia protocol managed by the webdynSunPM are the following:

Inverter model	Variant
2500 W output power	1
3300 W output power	3
5000 W output power	4
RPI H3	207
RPI H3A	209
RPI H3A for DES	212
RPI H4A	210
RPI H4A for DES	213
RPI H5	208
RPI H5A	211
RPI H5A for DES	214
RPI M10	202
RPI M10A for DES	217
RPI M12	203
RPI M15A	204.220
RPI M20A	205.221
RPI M30	206
RPI M30A	219
RPI M50A	218
RPI M6	200
RPI M6A for DES	215
RPI M8	201
RPI M8A for DES	216
SOLIVIA 10 EU G4TR EVR	111
SOLIVIA 10 EU T4 TL	91
SOLIVIA 11 EU G4TR	113
SOLIVIA 11 EU G4TR EVR	114
SOLIVIA 12 EU T4 TL	93
SOLIVIA 15 EU TL	27
SOLIVIA 15 EU TL G4	43
SOLIVIA 2.0 EU G4TR	102
SOLIVIA 2.5 AP G3	55
SOLIVIA 2.5 EU G3	15

Inverter model	Variant
SOLIVIA 2.5 EU G4TR	103
SOLIVIA 2.5 NA G4	31
SOLIVIA 20 EU TL	28
SOLIVIA 20 EU TL G4	44
SOLIVIA 3.0 AP G3	58
SOLIVIA 3.0 EU G3	18
SOLIVIA 3.0 EU G4TR	105
SOLIVIA 3.0 EU T4 TL	85
SOLIVIA 3.0 NA G4	34
SOLIVIA 3.0 NA G4 TL	120
SOLIVIA 3.3 AP G3	59
SOLIVIA 3.3 EU G3	19
SOLIVIA 3.3 EU G4TR	106
SOLIVIA 3.3 NA G4	35
SOLIVIA 3.6 AP G3	60
SOLIVIA 3.6 EU G3	20
SOLIVIA 3.6 EU G4TR	107
SOLIVIA 3.6 NA G4	36
SOLIVIA 3.8 NA G4 TL	121
SOLIVIA 30 EU T4 TL	95
SOLIVIA 4.4 EU G4TR	109
SOLIVIA 4.4 NA G4	38
SOLIVIA 5.0 AP G3	63
SOLIVIA 5.0 EU G3	14
SOLIVIA 5.0 EU G4TR	110
SOLIVIA 5.0 EU T4 TL	88
SOLIVIA 5.0 NA G4	39
SOLIVIA 5.0 NA G4 TL	122
SOLIVIA 5.2 NA G4 TL	124
SOLIVIA 6.0 EU T4 TL	89
SOLIVIA 6.6 NA G4 TL	125
SOLIVIA 7.6 NA G4 TL	123
SOLIVIA 8.0 EU T4 TL	90
SOLIVIA CM	100

Inverter model	Variant
SOLIVIA CS	99

The inverter lists are partial and subject to change.

2. Connecting the gateway to the Delta inverters via RS485 communication bus

The Delta inverters are connected to one of the three WebdynSunPM RS485 communication buses. The gateway can be at the end of the RS485 communication bus or in the middle.

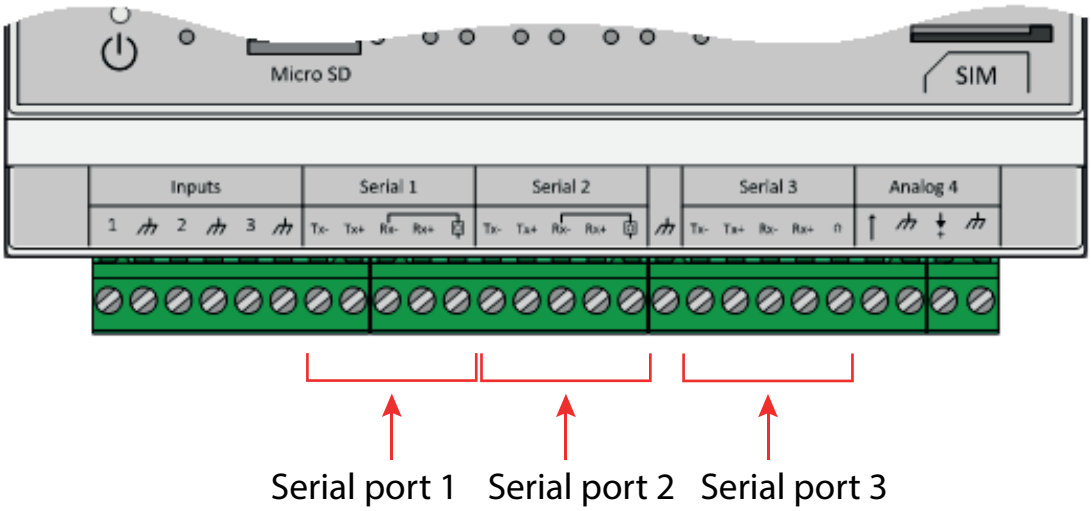

All wiring work must be carried out by a specialised qualified electrician. Before installation, all devices connected to the corresponding communication bus must be disconnected on both sides (DC and AC). Please follow all safety instructions featured in the inverter documentation.

For more details, please refer to the WebdynSunPM user manual.

2.1 Wiring Delta inverters using 2-wire RS485 (Half-Duplex):

The wiring may differ depending on the inverter model. Please refer to the documentation for the Delta Inverter to be wired.

Below are 3 wiring explanations for the most common Delta inverter models:

2.1.1 Communication module:

Wiring:

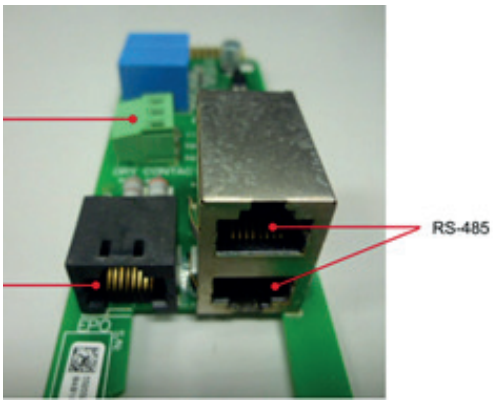

Pin assignment of the RS485 socket (EIA485)

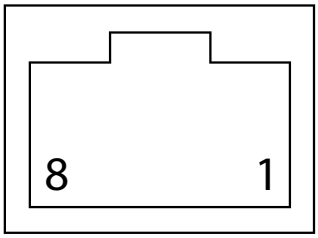

Top view

PIN
1 Reserved
2 Reserved
3 Reserved
4 GND (RS485)
5 Reserved
6 RX_B (RS485)/DONNEES-
7 TX_A (RS485)/DONNEES+
8 Reserved

Termination resistor:

A 120Ω termination resistor must be placed between pin 6 and pin 7 of the inverter's RS485 socket connector at the end of the line.

Wiring example:

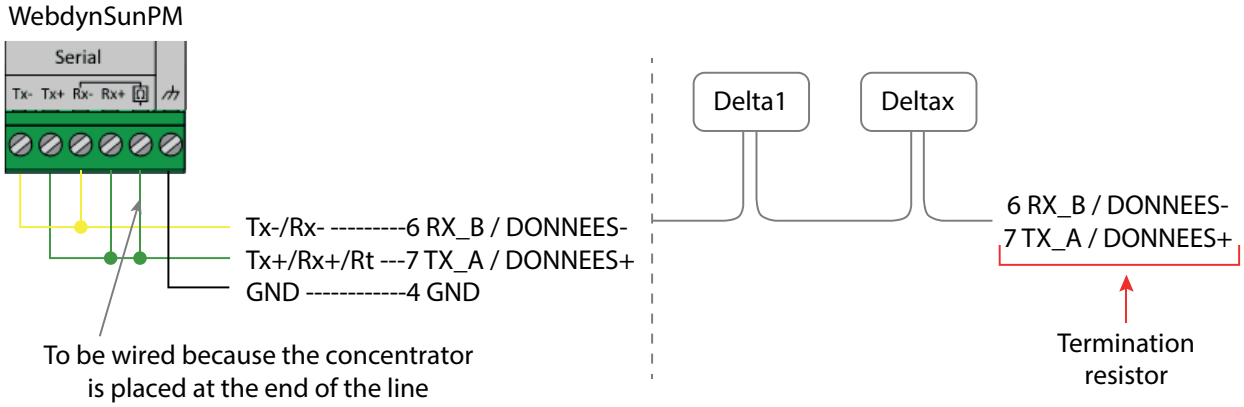

2.1.2 "485BRD-10" communication board:

The termination resistor on the inverter can be activated or deactivated using a DIP switch on the inverter's communication board.

Wiring:

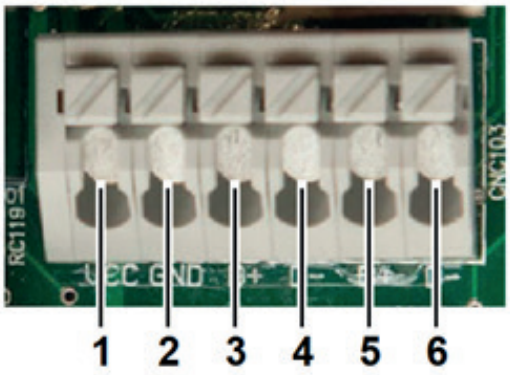

PIN	DESIGNATION
1	VCC (+12 V; 0.5 A)
2	GND
3	DATA+ (RS485)
4	DATA- (RS485)
5	DATA+ (RS485)
6	DATA- (RS485)

Termination resistor:

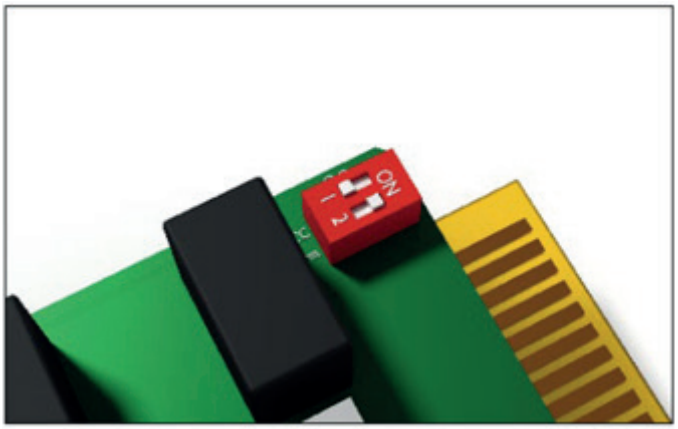

VCC

Termination resistor:
- ON: Enabled
- OFF: Disabled

Wiring example:

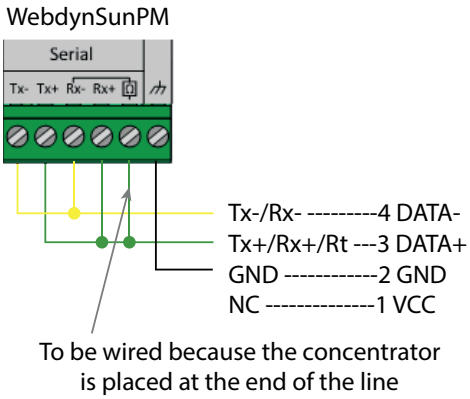

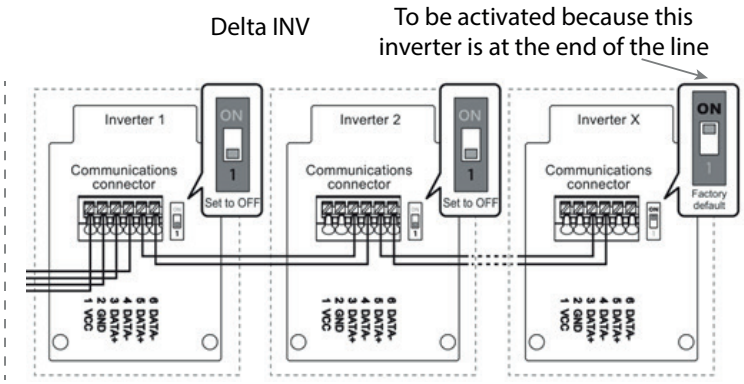

DC1 data connector:

Delta's DC1 is used in "Retrofit" mode.

(refer to the Delta manufacturer manual for Delta DC1 installation and setup)

Wiring:

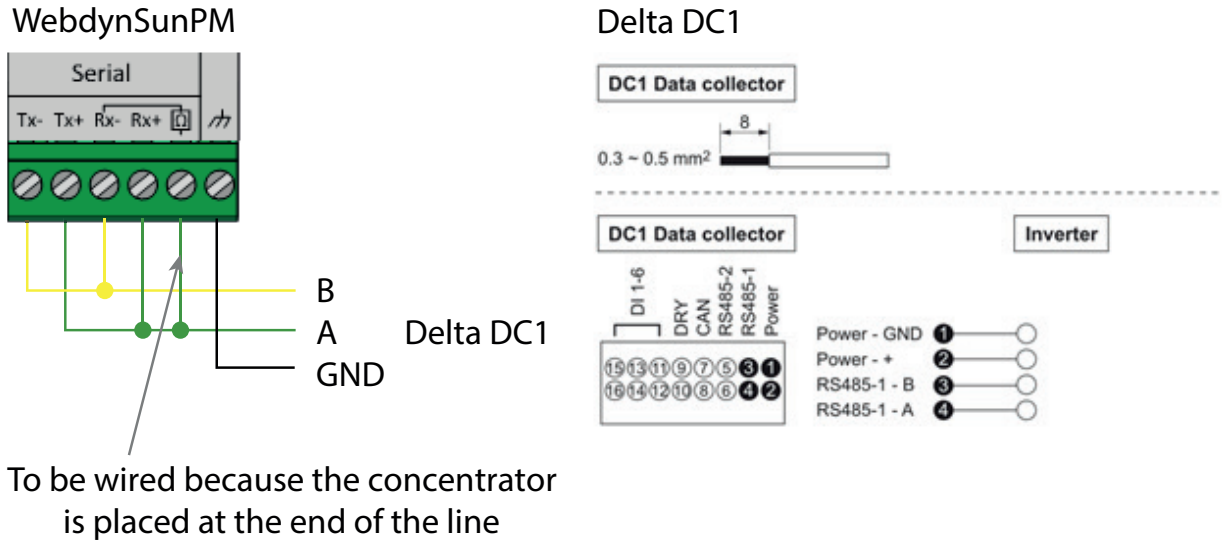

The DC1 has a built-in end-of-line resistor.

Only one DC1 can be connected to a WebdynSunPM serial bus.

3. Serial port configuration

The Delta Inverter serial ports must be configured. (refer to the Delta manufacturer manual).

Check that the serial identifier is different on all the connected devices on the site. The serial parameters must also be identical on all devices connected to the same bus.

The serial port can be configured using the WebdynSunPM web interface using the "Settings" tab.

The “serial” part is used to configure 3 RS485/422 serial ports each which each have their own settings and output.

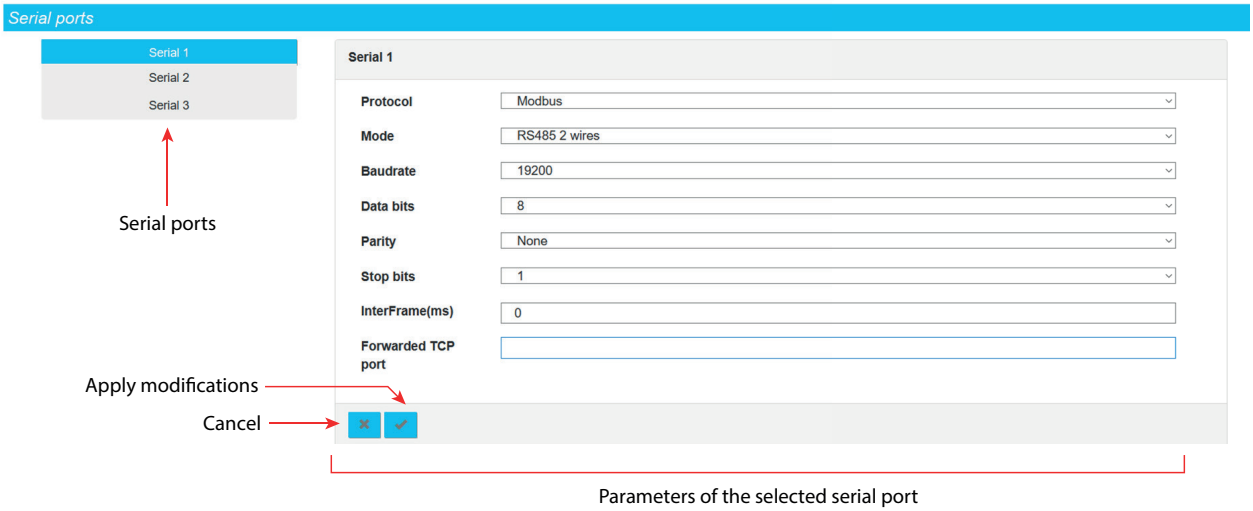

The possible settings for SMA inverters in SMA-net mode for each serial port are:

Web interface	<uid>_daq.csv parameter	Description
Protocol	protocol	Serial interface protocol type: Modbus: serial port configured for SunSpec RTU; DELTA: serial port configured for Delta Solivia
Mode	wires	Serial interface mode: RS485 2 wires: Half-Duplex (2 wires) RS485 serial connection
Baudrate	baudrate	Serial connection speed in bauds: 9600; 19200 (default value for inverters); 38400
Data bits	data_bits	Number of data bits: 8
Parity	parity	Serial connection parity: none no parity
Stop bits	stop_bits	Number of stop bits: 1
InterFrame	interframe	The waiting time between 2 frames exchanged on the serial port. This time is expressed in ms. See the explanation in the WebdynSunPM user manual. 0 recommended value.

Web interface	<uid>_daq.csv parameter	Description
Forwarded TCP port	forwarded_port	Forwarded TCP port. If there is a value in this field, the concentrator opens a modbusTCP port on the entered port number. When modbusTCP devices connect to this port, all sent requests are directly forwarded to the modbusRTU bus and the response is returned to the connected device using this modbusTCP port. This option is used to create a communication tunnel between modbusTCP devices and the local modbusRTU network. The requests are slotted between the concentrator's internal monitoring requests. Leave the field blank. (recommended value)

This configuration can be accessed remotely in file "<uid>_daq.csv" stored in the CONFIG directory on the remote server. (see WebdynSunPM user manual)

4. Automatic device detection

The concentrator can detect Delta inverters automatically depending on the protocol used on the model (see list below):

- Sunspec: SunSpec protocol devices.
- Delta Solivia: Delta manufacturer Delta solivia protocol devices.

5. Delta Solivia device detection

The automatic detection of Delta solivia devices requires the following steps:

- Connect the device to the concentrator using a serial connection configured as explained below.
- Configure the serial connection on the configuration page indicating the required communication speed and the protocol type. Indicate "Delta":

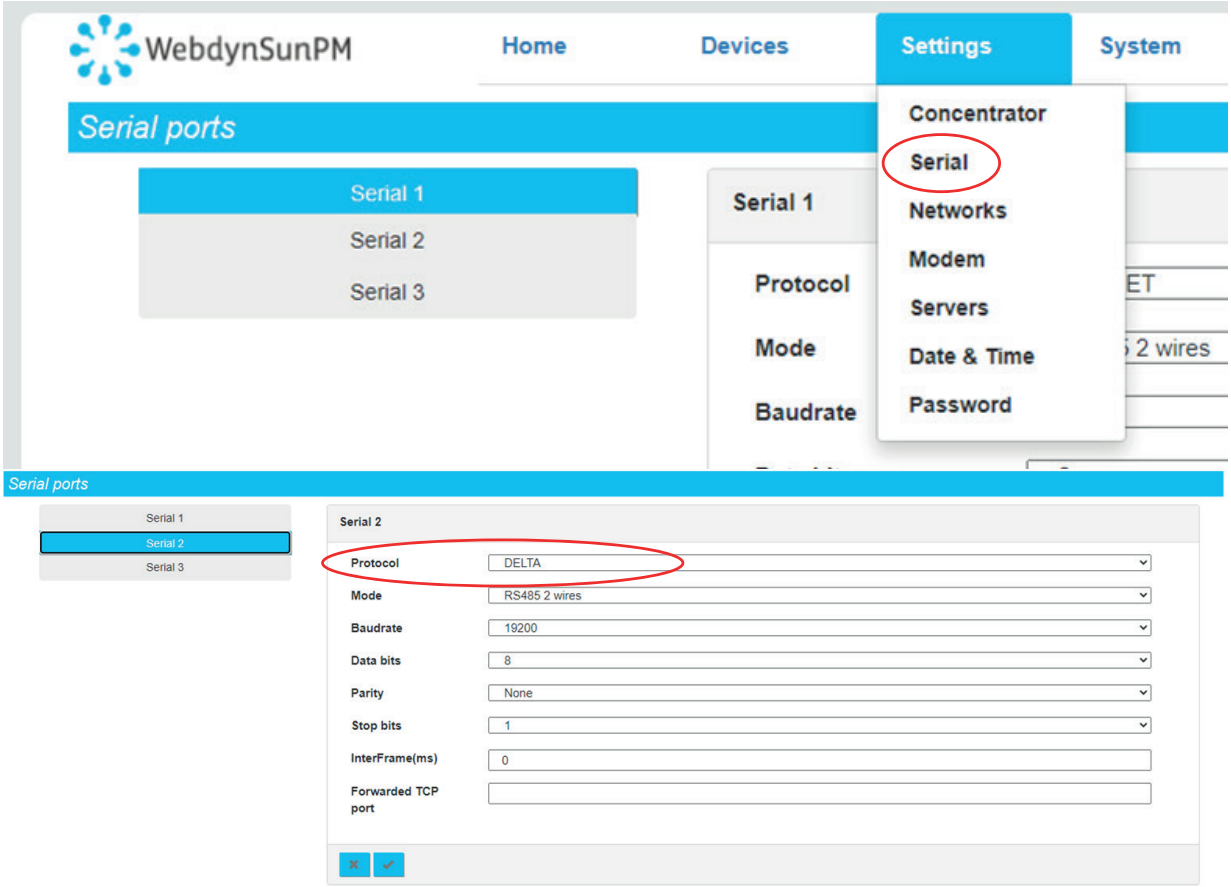

- Go to the device page and click the “Device detect” button:

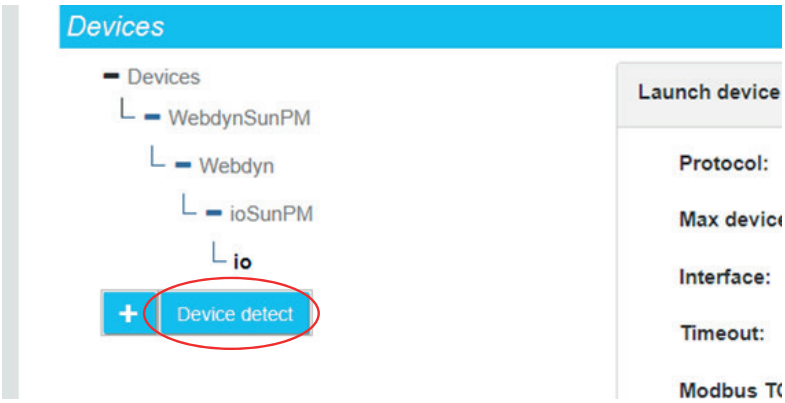

- The detection page is displayed:

  - Select the Delta Solivia protocol from the drop-down list on the first “Protocol” field.
  - Enter the maximum number of devices to detect in the “Max devices” field. This can speed up the total detection time. By leaving the default value (100), all the devices will be polled and all detectable devices will be detected.
  - Select the configured serial port in the “Interface” field
  - The timeout indicates the Delta Solivia device response time. By default it is set to 10000 ms.

- Next click the “Start detection” button to launch the detection. The progress window below is displayed:

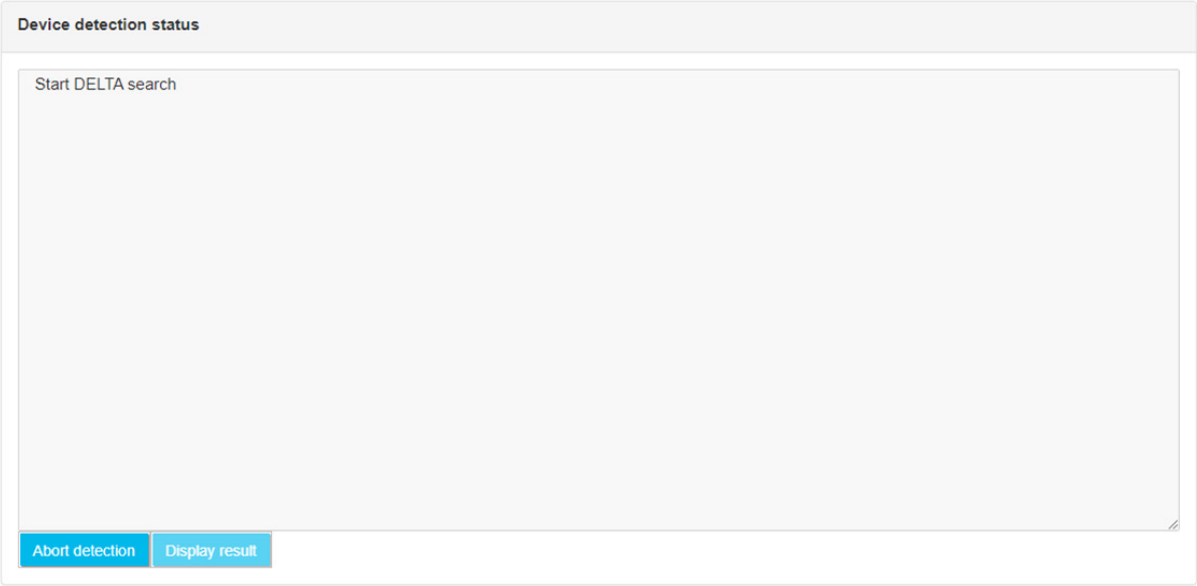

The detection progress is displayed on the web page:

  - “Start DELTA search” means the Delta scan has begun.

- As the detection progresses, the screen displays the detected devices with their index, serial number, model and address on the bus:

```
Device idx: 0, serial: ABCDAAAAAAAAAAAAA, model: V1, Address: 0x3 detected
```

- On completion of the detection, the page displays the number of detected devices:

```
found 10 devices
Search DELTA finished
```

- It is always possible to interrupt detection by clicking the “Abort detection” button:

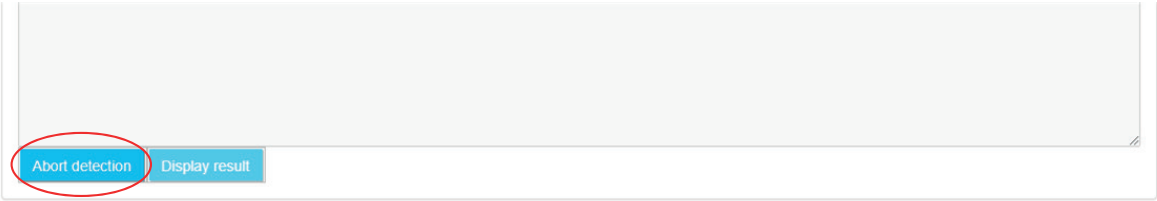

- On completion of Delta detection, the following page is displayed to view all detected devices and, eventually, add them to the configuration:

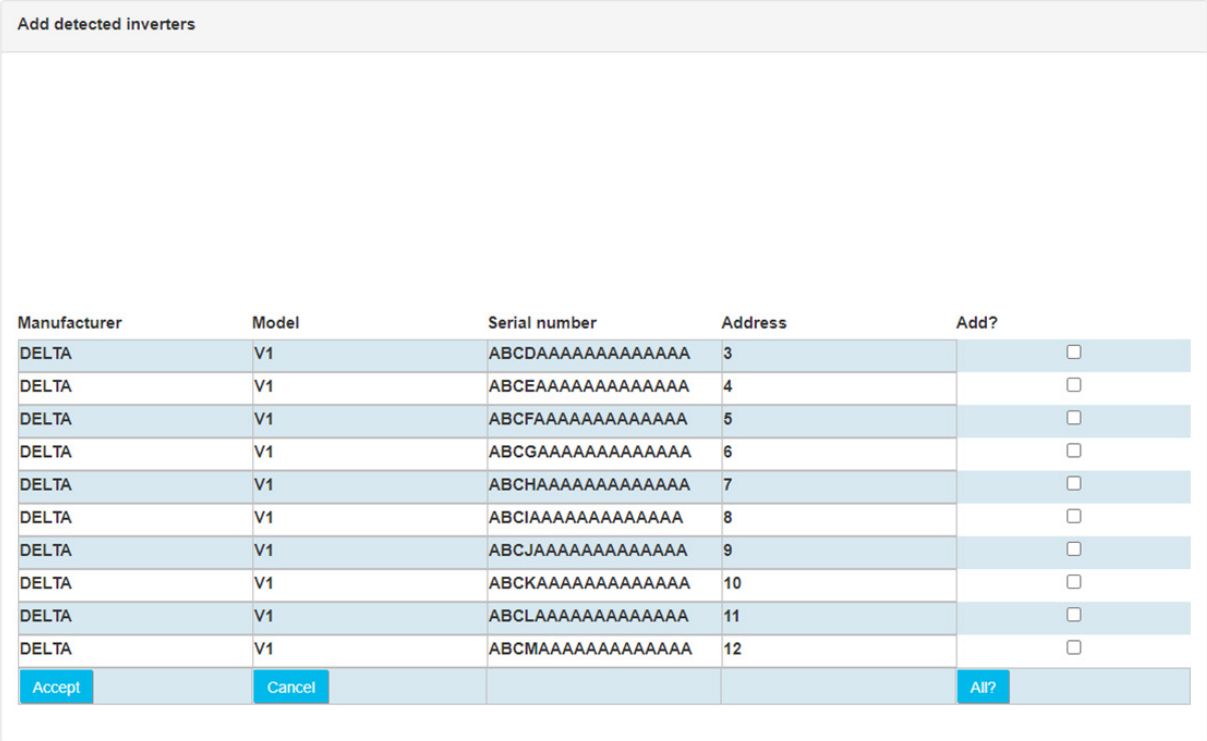

This screen therefore displays all the detected devices, as well as a certain number of data read from the Delta device tables (model, serial number, address, manufacturer)

There is also a checkbox at the right to select the devices to add to the configuration. Note that if the detected device is already part of the configuration, the checkbox is not checked by default. Otherwise the checkbox is checked for automatic addition.

Once the devices have been selected, clicking the “Accept” button imports the new configuration to the concentrator and the device appears in the configured devices.

- When users click the “Accept” button, the device import starts by reading the different frames to completely create the devices. Import progress is displayed in the import window:

Note that if the device already existed in the configuration and the user forces a new import, the previous device is not overwritten. A new device is created in addition to the pre-existing device.

Automatic detection can be used to create the definition files needed to operate the inverters. These files are stored and accessible in the DEF directory on the remote server. (see WebdynSunPM user manual).

6. Delta Solivia definition file

The Delta solivia protocol file names are composed as follows:

<uid>_DELTA_Inverter_DELTA_V<Model>.csv

Where:

- <uid>: Concentrator identifier
- <Model>: automatically generated from the "Model" information of the Delta Solivia protocol that corresponds to its variant. (see variants table above)

Definition file content:

Field	Description
Info1	Request reference. See the Delta Solivia documentation for the device.
Info2	Data offset in the requested query
Info3	Variable format. The authorised formats are the following: • U8: 8-bit unsigned integer (1 byte) • U16: 16-bit unsigned integer (2 bytes, or 1 register) • U32: 32-bit unsigned integer (4 bytes, or 2 registers) • U64: 64-bit unsigned integer (8 bytes, or 4 registers) • I8: 8-bit signed integer (1 byte) • I16: 16-bit signed integer (2 bytes, or 1 register) • I32: 32-bit signed integer (4 bytes, or 2 registers) • I64: 64-bit signed integer (8 bytes, or 4 registers) • F32: 32-bit floating (4 bytes, or 2 registers) • F64: 64-bit floating (8 bytes, or 4 registers) • String: the variable is a character string. In that case the “Address_Size” notation should be used for the “Info4” field
Info4	Data size

Example of a definition file for a Delta inverter (variant 209):

```
DELTA;Inverter;DELTA;V209
1;96-64;0;U16;2;Software version;;1.000000;0.000000;;1
2;96-1;0;STRING;11;SAP part number;;1.000000;0.000000;;4
3;96-1;11;STRING;18;SAP serial number;;1.000000;0.000000;;4
4;96-1;29;U32;4;SAP date code;;1.000000;0.000000;;4
5;96-1;33;U16;2;SAP revision;;1.000000;0.000000;;4
6;96-1;35;U16;2;DSP FW Rev;;1.000000;0.000000;;4
7;96-1;37;U16;2;DSP FW Date;;1.000000;0.000000;;4
8;96-1;39;U16;2;Redundant MCU FW Rev;;1.000000;0.000000;;4
9;96-1;41;U16;2;Redundant MCU FW Date;;1.000000;0.000000;;4
10;96-1;43;U16;2;Display MCU FW Rev;;1.000000;0.000000;;4
11;96-1;45;U16;2;Display MCU FW Date;;1.000000;0.000000;;4
12;96-1;47;U16;2;Display WebPage Ctrl FW;;1.000000;0.000000;;4
13;96-1;49;U16;2;Display WebPage Ctrl date;;1.000000;0.000000;;4
14;96-1;51;U16;2;Display Wifi Ctrl FW;;1.000000;0.000000;;4
15;96-1;53;U16;2;Display Wifi Ctrl date;;1.000000;0.000000;;4
16;96-1;55;U16;2;AC voltage (phase 1);;0.100000;0.000000;V;4
17;96-1;57;U16;2;AC current (phase 1);;0.010000;0.000000;A;4
18;96-1;59;U16;2;AC power (phase 1);;1.000000;0.000000;W;4
19;96-1;61;U16;2;AC frequency (phase 1);;0.010000;0.000000;Hz;4
20;96-1;63;U16;2;Redundant AC voltage (phase 1);;0.100000;0.000000;V;4
21;96-1;65;U16;2;Redundant AC frequency (phase 1);;0.010000;0.000000;Hz;4
22;96-1;67;U16;2;AC voltage (phase 2);;0.100000;0.000000;V;4
```

```
23;96-1;69;U16;2;AC current (phase 2);;0.010000;0.000000;A;4
24;96-1;71;U16;2;AC power (phase 2);;1.000000;0.000000;W;4
25;96-1;73;U16;2;AC frequency (phase 2);;0.010000;0.000000;Hz;4
26;96-1;75;U16;2;Redundant AC voltage (phase 2);;0.100000;0.000000;V;4
27;96-1;77;U16;2;Redundant AC frequency (phase 2);;0.010000;0.000000;Hz;4
28;96-1;79;U16;2;AC voltage (phase 3);;0.100000;0.000000;V;4
29;96-1;81;U16;2;AC current (phase 3);;0.010000;0.000000;A;4
30;96-1;83;U16;2;AC power (phase 3);;1.000000;0.000000;W;4
31;96-1;85;U16;2;AC frequency (phase 3);;0.010000;0.000000;Hz;4
32;96-1;87;U16;2;Redundant AC voltage (phase 3);;0.100000;0.000000;V;4
33;96-1;89;U16;2;Redundant AC frequency (phase 3);;0.010000;0.000000;Hz;4
34;96-1;91;U16;2;Solar voltage at input 1;;0.100000;0.000000;V;4
35;96-1;93;U16;2;Solar current at input 1;;0.010000;0.000000;A;4
36;96-1;95;U16;2;Solar power at input 1;;1.000000;0.000000;W;4
37;96-1;97;U16;2;Solar voltage at input 2;;0.100000;0.000000;V;4
38;96-1;99;U16;2;Solar current at input 2;;0.010000;0.000000;A;4
39;96-1;101;U16;2;Solar power at input 2;;1.000000;0.000000;W;4
40;96-1;103;U16;2;AC power;;1.000000;0.000000;W;4
41;96-1;105;U16;2;(+)Bus Voltage;;1.000000;0.000000;V;4
42;96-1;107;U16;2;(-)Bus Voltage;;1.000000;0.000000;V;4
43;96-1;109;U32;4;Supplied ac energy today;;1.000000;0.000000;Wh;4
44;96-1;113;U32;4;Inverter runtime today;;1.000000;0.000000;s;4
45;96-1;117;U32;4;Supplied ac energy(total);;1.000000;0.000000;kWh;4
46;96-1;121;U32;4;Inverter runtime(total);;1.000000;0.000000;s;4
47;96-1;125;U16;-2;Calculated temperature inside rack;;1.000000;0.000000;°C;4
48;96-1;127;U8;1;Status AC output 1;;1.000000;0.000000;;8
49;96-1;128;U8;1;Status AC output 2;;1.000000;0.000000;;8
50;96-1;129;U8;1;Status AC output 3;;1.000000;0.000000;;8
51;96-1;130;U8;1;Status AC output 4;;1.000000;0.000000;;8
52;96-1;131;U8;1;Status DC input 1;;1.000000;0.000000;;8
53;96-1;132;U8;1;Status DC input 2;;1.000000;0.000000;;8
54;96-1;133;U8;1;Error Status;;1.000000;0.000000;;8
55;96-1;134;U8;1;Error Status AC 1;;1.000000;0.000000;;8
56;96-1;135;U8;1;Global Error 1;;1.000000;0.000000;;8
57;96-1;136;U8;1;CPU Error;;1.000000;0.000000;;8
58;96-1;137;U8;1;Global Error 2;;1.000000;0.000000;;8
59;96-1;138;U8;1;Limits AC output 1;;1.000000;0.000000;;4
60;96-1;139;U8;1;Limits AC output 2;;1.000000;0.000000;;4
61;96-1;140;U8;1;Global Error 3;;1.000000;0.000000;;8
62;96-1;141;U8;1;Limits DC 1;;1.000000;0.000000;;4
63;96-1;142;U8;1;Limits DC 2;;1.000000;0.000000;;4
```

```
64;96-2;0;U16;2;Grid overvoltage setpoint;;0.100000;0.000000;V;17
65;96-2;2;U16;2;Grid overvoltage trip time;;0.010000;0.000000;s;1
66;96-2;4;U16;2;Grid overvoltage recovery setpoint;;0.100000;0.000000;V;1
67;96-2;6;U16;2;Grid undervoltage setpoint;;0.100000;0.000000;V;17
68;96-2;8;U16;2;Grid undervoltage trip time;;0.010000;0.000000;s;1
69;96-2;10;U16;2;Grid undervoltage recovery setpoint;;0.100000;0.000000;V;1
70;96-2;12;U16;2;Grid overvoltage setpoint slow;;0.100000;0.000000;V;17
71;96-2;14;U16;2;Grid overvoltage trip time slow;;0.010000;0.000000;s;1
72;96-2;16;U16;2;Grid overvoltage recovery setpoint slow;;0.100000;0.000000;V;1
73;96-2;18;U16;2;Grid undervoltage setpoint slow;;0.100000;0.000000;V;17
74;96-2;20;U16;2;Grid undervoltage trip time slow;;0.010000;0.000000;s;1
75;96-2;22;U16;2;Grid undervoltage recovery setpoint slow;;0.100000;0.000000;V;1
76;96-2;24;U16;2;Grid high frequency setpoint;;0.010000;0.000000;Hz;1
77;96-2;26;U16;2;Grid high frequency trip time;;0.010000;0.000000;s;1
78;96-2;28;U16;2;Grid high frequency recovery setpoint;;0.010000;0.000000;Hz;1
79;96-2;30;U16;2;Grid low frequency setpoint;;0.010000;0.000000;Hz;1
80;96-2;32;U16;2;Grid low frequency trip time;;0.010000;0.000000;s;1
81;96-2;34;U16;2;Grid low frequency recovery setpoint;;0.010000;0.000000;Hz;1
82;96-2;36;U16;2;DC Injection current;;0.010000;0.000000;A;1
83;96-2;38;U16;2;DC Injection Time;;0.100000;0.000000;s;1
84;96-2;40;U16;2;Active islanding gain;;1.000000;0.000000;;1
85;96-2;42;U16;2;Short Restart Time (grid fault < 3 sec);;0.100000;0.000000;s;1
86;96-2;44;U16;2;Insulation R Setpoint;;1.000000;0.000000;K;1
87;96-2;46;U16;2;restart time;;0.100000;0.000000;s;1
88;96-2;48;U16;2;Grid synchronization time;;0.100000;0.000000;s;1
89;96-2;50;U16;2;Ground Current;;0.100000;0.000000;A;1
90;96-2;52;U16;2;Ground Current Time;;0.100000;0.000000;s;1
91;96-2;54;U16;2;Max Power;;1.000000;0.000000;W;1
92;96-2;56;U16;2;Country_Configuration_Reg;;1.000000;0.000000;;1
93;96-2;58;U8;1;Store setup to EEPROM;;1.000000;0.000000;;1
94;13-136;0;U8;1;Maximum power in percentage;;1.000000;0.000000;;0
```

7. Delta Sunspec device detection

The automatic detection of Delta Sunspec devices requires the following steps:

- Connect the device to the concentrator using a serial connection configured as explained below.
- Configure the serial connection on the configuration page indicating the required communication speed and the protocol type. Indicate "Modbus":

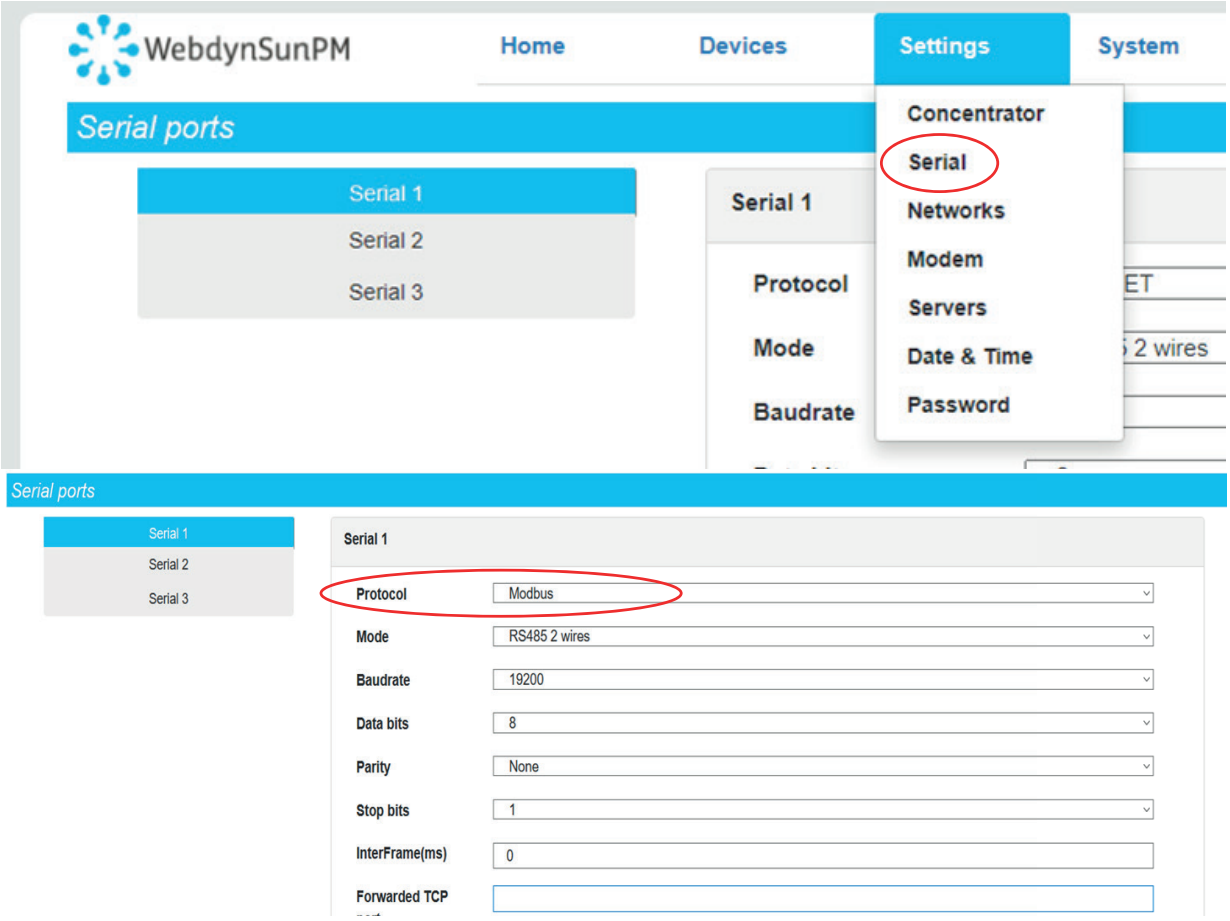

- Go to the device page and click the “Device detect” button:

-

- The detection page is displayed:

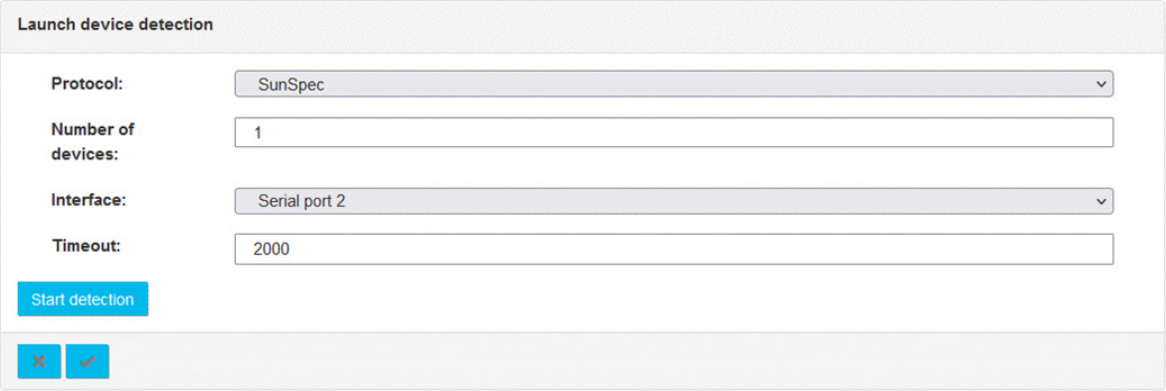

  - Select the SunSpec protocol from the drop-down list on the first “Protocol” field.
  - Enter the number of devices to detect in the “Number of devices” field. The default value is “100”.
  - Select the configured serial port in the “Interface”” field. For the serial connection to be selectable, it must first be configured by going to the "Settings" tab, then "Serial" and selecting the "Modbus" protocol.
  - The timeout indicates the Delta Sunspec device response time. By default it is set to 2000 ms.
- Next click the “Start detection” button to launch the detection. The progress window below is displayed:

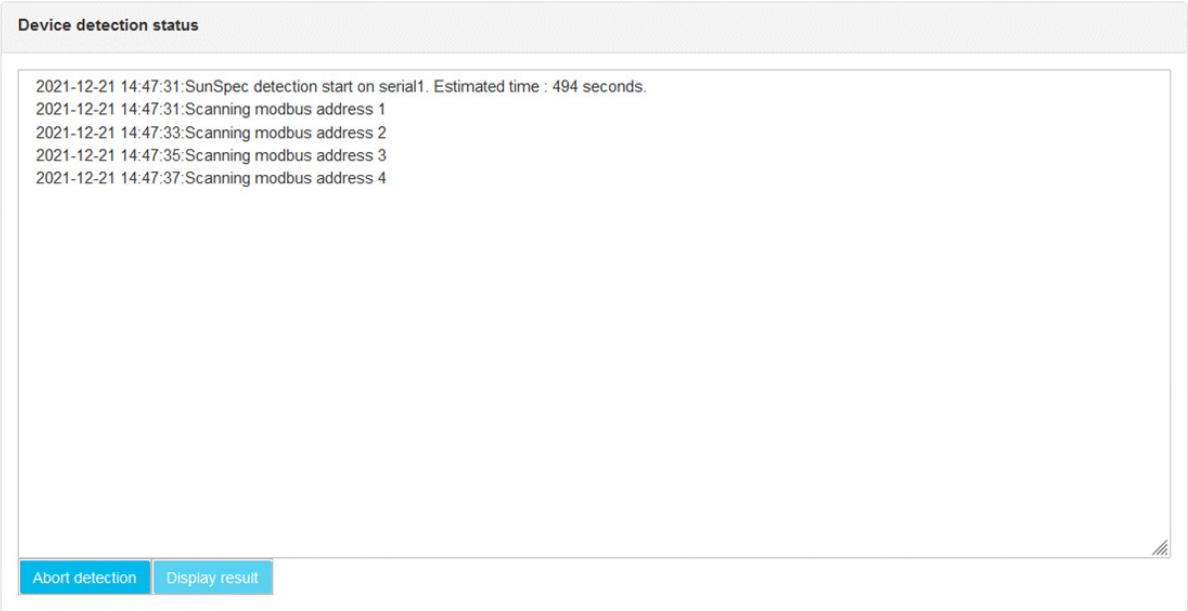

The detection progress is displayed on the web page:

  - "SunSpec detection start" means that the SunSpec scan has begun.

- “NON SUNSPEC device found” means that a non SunSpec modbus device was detected at the indicated modbus address:

```
2021-12-24 09:56:10:NON SUNSPEC device found at @1.
```

Means that a modbus device that does not meet SunSpec specifications was found at modbus address 1.

- “SunSpec device found” means that a modbus device meeting SunSpec specifications was detected at the indicated modbus address:

```
2021-12-24 09:56:21: SunSpec device found at @126.
```

Means that a modbus device that meets SunSpec specifications was found at modbus address “126”.

- “Found table” means that a SunSpec table was detected on the device. The information line then indicates the table identifier, its size claimed by the device as well as technical information on the device and the modbus start register for the table:

```
2021-12-24 09:56:21:Found table 1:66 at 40002@126
```

Means that table identifier “1” of size “66” registers was detected on the modbus device at register “40002” and modbus address “126”

- The screen shows the detected devices with their Modbus tables and their address on the bus:

```
SunSpec device found at @126.
Found table 1:66 at 40002@126
Found table 11:13 at 40070@126
Found table 12:98 at 40085@126
Found table 101:50 at 40185@126
Found table 120:26 at 40237@126
Found table 121:30 at 40265@126
Found table 122:44 at 40297@126
Found table 123:24 at 40343@126
Found table 124:24 at 40369@126
Found table 126:64 at 40395@126
Found table 127:10 at 40461@126
Found table 128:14 at 40473@126
Found table 131:64 at 40489@126
Found table 132:64 at 40555@126
Found table 160:128 at 40621@126
Found table 129:60 at 40751@126
Found table 130:60 at 40813@126
```

- “End of SunSpec detection” means that SunSpec detection is complete. The line indicates the number of detected devices:

```
2021-12-24 09:56:53: End of SunSpec detection on serial1. 1 devices found.
```

SunSpec detection successfully completed on Ethernet interface 1. One device was therefore detected.

- It is always possible to interrupt detection by clicking the “Abort detection” button. However, this is not recommended, as Delta inverters can be disrupted if the detection is stopped during discovery.

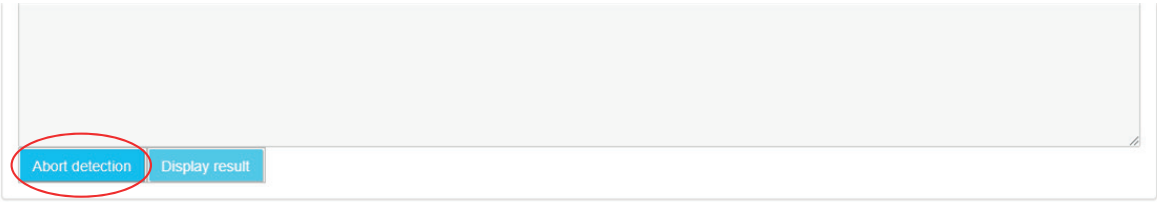

- On completion of the Delta SunSpec detection, the following page is displayed to view all detected devices and, eventually, add them to the configuration:

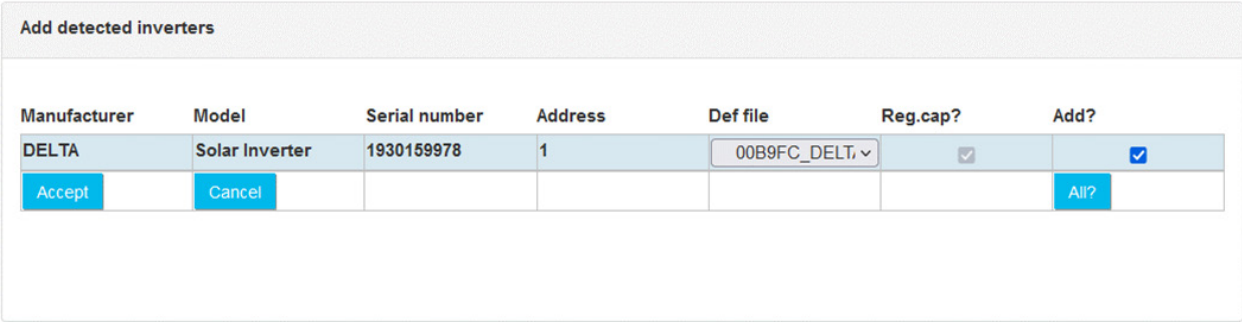

This screen therefore displays all the detected devices, as well as a certain number of data read from the Delta SunSpec device tables (model, serial number, address, manufacturer)

There is also a checkbox at the right to select the devices to add to the configuration. Note that if the detected device is already part of the configuration, the checkbox is not checked by default. Otherwise the checkbox is checked for automatic addition.

Once the devices have been selected, clicking the “Accept” button imports the new configuration to the concentrator and the device appears in the configured devices.

The variables for this new device will be generated according to the detected SunSpec tables. Thus, for each detected SunSpec table, the following variables will be created:

- <TableId>_tableId: this variable will contain the numeric table identifier in 16-bit integer format.
- <TableId>_tableSize: this variable contains the table size in number of registers in16-bit integer format.
- <TableId>_<variableName>: for each table variable declared in the SunSpec standards, a corresponding variable will be associated with the device. The variable name will be composed of the table identifier followed by the variable name.

- <TableId>_<repeatBlock>_<variableName>: for variables that come from a repeat block, the variables are created using the table ID, the repeat number and the variable name, so that the generated name is unique.

By default, the generated variables are of the "Parameter" type and will therefore have "Action" code 1, except for the variables in tables 101, 102, 103, 111, 112, 113, 123, 160 and 401, which will be created with the "Immediate" type, i.e. code 4.

It should also be noted that the following variables will have a tag automatically applied:

- WMaxLimPct of table 123 has the "cmdPwrPercent" tag
- WMaxLimPct_RmpTms of table 123 has the "WMaxLimPct_RmpTms" tag
- WMaxLimPct_Ena of table 123 has the "WMaxLimPct_Ena" tag
- VarPct_Mod of table 123 has the "VArPct_Mod" tag

  Note that if the device already existed in the configuration and the user forces a new import, the previous device is not overwritten. A new device is created in addition to the pre-existing device. If the user clicks the "Cancel" button, this list is cleared and the page returns to the detection type selection screen.

Automatic detection can be used to create the definition files needed to operate the inverters. These files are stored and accessible in the DEF directory on the remote server. (see WebdynSunPM user manual)

8. Delta SunSpec definition file

The Delta Sunspec protocol file names are generated as follows:

<uid>_SunSpec_inverter_<Model>_<interface>.csv

Where:

- <uid>: Concentrator identifier
- <Model>: automatically generated from the discovery information
- <interface>: interface name

Definition file content:

Field	Description
Info1	The type of register read. This type results in the function codes that will be used to read and write the data. The authorised values are: • 1: “coil”. The modbus read function code will be 0x01. The write function code will be 0x05. • 2: “discrete inputs“. The modbus read function code will be 0x03. This type is for input reading. Writing is therefore not possible. • 3: “holding register”. The modbus read function code will be 0x03. The write function code will be 0x10. • 4: “input”. The modbus read function code will be 0x04. As this type is for input reading, there is no associated write function.
Info2	Address and size of the register or input to read. The possible forms are the following: • Register address. This is the most common case. Here, we find the register address in its classic format. Example: “40000” causes the register to be read at address 40000 • Register address and size. This format is used to indicate the size of the data to be read, expressed in bytes. This format is used to read character strings for example. The format is the following: Register address_Size. Thus, for example, the value “40000_10” configures a variable of which the data is in register 40000 and is 10 bytes long. If the type is "U8" or "I8", the "Size" information corresponds to the offset to be applied to the register to obtain the information. Thus, for example, for an 8-bit integer (1 byte), the value "40000_1" implies that the 2nd byte is to be read from modbus register 40000 • Register address, 1st bit and number of bits. This format is used to indicate the register at which a bit field starts and the bit field size. Note that if the number of bits is 1, there is no need to indicate the number of bits. The format is the following: Register address_1st bit_Number of bits. Thus, for example, the value “40005_4_8” configures a variable of which the data is in register 40005 at its 4th bit and is 8 bits long. Similarly, the value “40008_1” configures a variable of which the data is in register 40008 at its 1st bit and of which the value is only 1 bit long considering that the number of bits is not indicated.

Field	Description
Info3	Variable type. The authorised types are the following: • U8: 8-bit unsigned integer (1 byte) • U16: 16-bit unsigned integer (2 bytes, or 1 register) • U32: 32-bit unsigned integer (4 bytes, or 2 registers) • U64: 64-bit unsigned integer (8 bytes, or 4 registers) • I8: 8-bit signed integer (1 byte) • I16: 16-bit signed integer (2 bytes, or 1 register) • I32: 32-bit signed integer (4 bytes, or 2 registers) • I64: 64-bit signed integer (8 bytes, or 4 registers) • F32: 32-bit floating (4 bytes, or 2 registers) • F64: 64-bit floating (8 bytes, or 4 registers) • String: the variable is a character string. The "Address_Size" notation must then be used for the "Info2" field • Bits: the variable is of the bit field type. The "Address_1st bit_Number of bits" notation must then be used for the "Info2" field • IP: the variable is of the IP address V4 type and is therefore coded on 4 bytes (2 registers) • IPV6: the variable is of the IP address V6 type and is therefore coded on 16 bytes (8 registers) • MAC: the variable is of the MAC address type in "EUI48" format. It is therefore coded on 6 bytes (3 registers) Note that the integer types can be modified by adding a suffix. The authorised modifiers are: • _W: words are exchanged, i.e. the contents of the variable's registers are exchanged in blocks of 2 bytes • _B: bytes are exchanged, i.e. the contents of the variable's registers are exchanged at byte level, one by one • _WB: words AND bytes are exchanged. The 2 previous modifiers are applied. Thus, for example, the “I32_W” notation indicates that it is a variable of which bytes 1 and 2 will be exchanged with bytes 3 and 4. Similarly, the “U16_B” notation indicates that bytes 1 and 2 of the variable are exchanged. This is a “Little endian/Big endian” conversion
Info4	Scale Factor: when the variable was generated automatically by SunSpec detection, this field contains the variable name that determines its scale factor when applicable. When the configured variable value is calculated, the read variable will have its decimal point position offset by as many digits as the value of its “scale factor”. The formula is “var * 10sf” where “var” is the value of the read variable and “sf” the variable value indicated by the “scale factor” For example, for a variable “var1” with scale factor variable “sf_var1”. If “var1” is equal to “1234” and “sf_var1” equal to “3”, the decimal point for “var1” will be offset by 3 digits to the right to obtain “1234000”. If “var1” is equal to “1234” and “sf_var1” equal to “-2”, the decimal point for “var1” will be offset by 2 digits to the left to obtain “12.34”

Example of a SunSpec Delta inverter definition file:

```
modbusRTU;inverter;Delta;Solar_Inverter
1;3;40002;I16;;1_tableId;;1.000000;0.000000;;1
2;3;40003;I16;;1_tableSize;;1.000000;0.000000;;1
3;3;40004_32;STRING;;1_Mn;;1.000000;0.000000;;1
4;3;40020_32;STRING;;1_Md;;1.000000;0.000000;;1
5;3;40036_16;STRING;;1_Opt;;1.000000;0.000000;;1
6;3;40044_16;STRING;;1_Vr;;1.000000;0.000000;;1
7;3;40052_32;STRING;;1_SN;;1.000000;0.000000;;1
8;3;40068;U16;;1_DA;;1.000000;0.000000;;1
10;3;40070;I16;;11_tableId;;1.000000;0.000000;;1
11;3;40071;I16;;11_tableSize;;1.000000;0.000000;;1
12;3;40072;U16;;11_Spd;;1.000000;0.000000;Mbps;1
13;3;40073;U16;;11_CfgSt;;1.000000;0.000000;;1
14;3;40074;U16;;11_St;;1.000000;0.000000;;1
15;3;40075;MAC;;11_MAC;;1.000000;0.000000;;1
16;3;40079_8;STRING;;11_Nam;;1.000000;0.000000;;1
17;3;40083;U16;;11_Ctl;;1.000000;0.000000;;1
18;3;40084;U16;;11_FrcSpd;;1.000000;0.000000;Mbps;1
19;3;40085;I16;;12_tableId;;1.000000;0.000000;;1
20;3;40086;I16;;12_tableSize;;1.000000;0.000000;;1
21;3;40087_8;STRING;;12_Nam;;1.000000;0.000000;;1
22;3;40091;U16;;12_CfgSt;;1.000000;0.000000;;1
23;3;40092;U16;;12_ChgSt;;1.000000;0.000000;;1
24;3;40093;U16;;12_Cap;;1.000000;0.000000;;1
25;3;40094;U16;;12_Cfg;;1.000000;0.000000;;1
26;3;40095;U16;;12_Ctl;;1.000000;0.000000;;1
27;3;40096_16;STRING;;12_Addr;;1.000000;0.000000;;1
28;3;40104_16;STRING;;12_Msk;;1.000000;0.000000;;1
29;3;40112_16;STRING;;12_Gw;;1.000000;0.000000;;1
30;3;40120_16;STRING;;12_DNS1;;1.000000;0.000000;;1
31;3;40128_16;STRING;;12_DNS2;;1.000000;0.000000;;1
32;3;40136_24;STRING;;12_NTP1;;1.000000;0.000000;;1
33;3;40148_24;STRING;;12_NTP2;;1.000000;0.000000;;1
34;3;40160_24;STRING;;12_DomNam;;1.000000;0.000000;;1
35;3;40172_24;STRING;;12_HostNam;;1.000000;0.000000;;1
37;3;40185;I16;;101_tableId;;1.000000;0.000000;;1
38;3;40186;I16;;101_tableSize;;1.000000;0.000000;;1
39;3;40187;U16;101_A_SF;101_A;;1.000000;0.000000;A;4
40;3;40188;U16;101_A_SF;101_AphA;;1.000000;0.000000;A;4
41;3;40189;U16;101_A_SF;101_AphB;;1.000000;0.000000;A;4
42;3;40190;U16;101_A_SF;101_AphC;;1.000000;0.000000;A;4
```

```
43;3;40191;I16;;101_A_SF;;1.000000;0.000000;;4
44;3;40192;U16;101_V_SF;101_PPVphAB;;1.000000;0.000000;V;4
45;3;40193;U16;101_V_SF;101_PPVphBC;;1.000000;0.000000;V;4
46;3;40194;U16;101_V_SF;101_PPVphCA;;1.000000;0.000000;V;4
47;3;40195;U16;101_V_SF;101_PhVphA;;1.000000;0.000000;V;4
48;3;40196;U16;101_V_SF;101_PhVphB;;1.000000;0.000000;V;4
49;3;40197;U16;101_V_SF;101_PhVphC;;1.000000;0.000000;V;4
50;3;40198;I16;;101_V_SF;;1.000000;0.000000;;4
51;3;40199;I16;101_W_SF;101_W;;1.000000;0.000000;W;4
52;3;40200;I16;;101_W_SF;;1.000000;0.000000;;4
53;3;40201;U16;101_Hz_SF;101_Hz;;1.000000;0.000000;Hz;4
54;3;40202;I16;;101_Hz_SF;;1.000000;0.000000;;4
55;3;40203;I16;101_VA_SF;101_VA;;1.000000;0.000000;VA;4
56;3;40204;I16;;101_VA_SF;;1.000000;0.000000;;4
57;3;40205;I16;101_VAr_SF;101_VAr;;1.000000;0.000000;var;4
58;3;40206;I16;;101_VAr_SF;;1.000000;0.000000;;4
59;3;40207;I16;101_PF_SF;101_PF;;1.000000;0.000000;Pct;4
60;3;40208;I16;;101_PF_SF;;1.000000;0.000000;;4
61;3;40209;U32;101_WH_SF;101_WH;;1.000000;0.000000;Wh;4
62;3;40211;I16;;101_WH_SF;;1.000000;0.000000;;4
63;3;40212;U16;101_DCA_SF;101_DCA;;1.000000;0.000000;A;4
64;3;40213;I16;;101_DCA_SF;;1.000000;0.000000;;4
65;3;40214;U16;101_DCV_SF;101_DCV;;1.000000;0.000000;V;4
66;3;40215;I16;;101_DCV_SF;;1.000000;0.000000;;4
67;3;40216;I16;101_DCW_SF;101_DCW;;1.000000;0.000000;W;4
68;3;40217;I16;;101_DCW_SF;;1.000000;0.000000;;4
69;3;40218;I16;101_Tmp_SF;101_TmpCab;;1.000000;0.000000;C;4
70;3;40219;I16;101_Tmp_SF;101_TmpSnk;;1.000000;0.000000;C;4
71;3;40220;I16;101_Tmp_SF;101_TmpTrns;;1.000000;0.000000;C;4
72;3;40221;I16;101_Tmp_SF;101_TmpOt;;1.000000;0.000000;C;4
73;3;40222;I16;;101_Tmp_SF;;1.000000;0.000000;;4
74;3;40223;U16;;101_St;;1.000000;0.000000;;4
75;3;40224;U16;;101_StVnd;;1.000000;0.000000;;4
76;3;40225;U32;;101_Evt1;;1.000000;0.000000;;4
77;3;40227;U32;;101_Evt2;;1.000000;0.000000;;4
78;3;40229;U32;;101_EvtVnd1;;1.000000;0.000000;;4
79;3;40231;U32;;101_EvtVnd2;;1.000000;0.000000;;4
80;3;40233;U32;;101_EvtVnd3;;1.000000;0.000000;;4
81;3;40235;U32;;101_EvtVnd4;;1.000000;0.000000;;4
82;3;40237;I16;;120_tableId;;1.000000;0.000000;;1
83;3;40238;I16;;120_tableSize;;1.000000;0.000000;;1
```

```
84;3;40239;U16;;120_DERTyp;;1.000000;0.000000;;1
85;3;40240;U16;120_WRtg_SF;120_WRtg;;1.000000;0.000000;W;1
86;3;40241;I16;;120_WRtg_SF;;1.000000;0.000000;;1
87;3;40242;U16;120_VARtg_SF;120_VARtg;;1.000000;0.000000;VA;1
88;3;40243;I16;;120_VARtg_SF;;1.000000;0.000000;;1
89;3;40244;I16;120_VArRtg_SF;120_VArRtgQ1;;1.000000;0.000000;var;1
90;3;40245;I16;120_VArRtg_SF;120_VArRtgQ2;;1.000000;0.000000;var;1
91;3;40246;I16;120_VArRtg_SF;120_VArRtgQ3;;1.000000;0.000000;var;1
92;3;40247;I16;120_VArRtg_SF;120_VArRtgQ4;;1.000000;0.000000;var;1
93;3;40248;I16;;120_VArRtg_SF;;1.000000;0.000000;;1
94;3;40249;U16;120_ARtg_SF;120_ARtg;;1.000000;0.000000;A;1
95;3;40250;I16;;120_ARtg_SF;;1.000000;0.000000;;1
96;3;40251;I16;120_PFRtg_SF;120_PFRtgQ1;;1.000000;0.000000;cos();1
97;3;40252;I16;120_PFRtg_SF;120_PFRtgQ2;;1.000000;0.000000;cos();1
98;3;40253;I16;120_PFRtg_SF;120_PFRtgQ3;;1.000000;0.000000;cos();1
99;3;40254;I16;120_PFRtg_SF;120_PFRtgQ4;;1.000000;0.000000;cos();1
100;3;40255;I16;;120_PFRtg_SF;;1.000000;0.000000;;1
101;3;40256;U16;120_WHRtg_SF;120_WHRtg;;1.000000;0.000000;Wh;1
102;3;40257;I16;;120_WHRtg_SF;;1.000000;0.000000;;1
103;3;40258;U16;120_AhrRtg_SF;120_AhrRtg;;1.000000;0.000000;AH;1
104;3;40259;I16;;120_AhrRtg_SF;;1.000000;0.000000;;1
105;3;40260;U16;120_MaxChaRte_SF;120_MaxChaRte;;1.000000;0.000000;W;1
106;3;40261;I16;;120_MaxChaRte_SF;;1.000000;0.000000;;1
107;3;40262;U16;120_MaxDisChaRte_SF;120_MaxDisChaRte;;1.000000;0.000000;W;1
108;3;40263;I16;;120_MaxDisChaRte_SF;;1.000000;0.000000;;1
110;3;40265;I16;;121_tableId;;1.000000;0.000000;;1
111;3;40266;I16;;121_tableSize;;1.000000;0.000000;;1
112;3;40267;U16;121_WMax_SF;121_WMax;;1.000000;0.000000;W;1
113;3;40268;U16;121_VRef_SF;121_VRef;;1.000000;0.000000;V;1
114;3;40269;I16;121_VRefOfs_SF;121_VRefOfs;;1.000000;0.000000;V;1
115;3;40270;U16;121_VMinMax_SF;121_VMax;;1.000000;0.000000;V;1
116;3;40271;U16;121_VMinMax_SF;121_VMin;;1.000000;0.000000;V;1
117;3;40272;U16;121_VAMax_SF;121_VAMax;;1.000000;0.000000;VA;1
118;3;40273;I16;121_VArMax_SF;121_VArMaxQ1;;1.000000;0.000000;var;1
119;3;40274;I16;121_VArMax_SF;121_VArMaxQ2;;1.000000;0.000000;var;1
120;3;40275;I16;121_VArMax_SF;121_VArMaxQ3;;1.000000;0.000000;var;1
121;3;40276;I16;121_VArMax_SF;121_VArMaxQ4;;1.000000;0.000000;var;1
122;3;40277;U16;121_WGra_SF;121_WGra;;1.000000;0.000000;% WMax/sec;1
123;3;40278;I16;121_PFMin_SF;121_PFMinQ1;;1.000000;0.000000;cos();1
124;3;40279;I16;121_PFMin_SF;121_PFMinQ2;;1.000000;0.000000;cos();1
125;3;40280;I16;121_PFMin_SF;121_PFMinQ3;;1.000000;0.000000;cos();1
```

```
126;3;40281;I16;121_PFMin_SF;121_PFMinQ4;;1.000000;0.000000;cos();1
127;3;40282;U16;;121_VArAct;;1.000000;0.000000;;1
128;3;40283;U16;;121_ClcTotVA;;1.000000;0.000000;;1
129;3;40284;U16;121_MaxRmpRte_SF;121_MaxRmpRte;;1.000000;0.000000;% WGra;1
130;3;40285;U16;121_ECPNomHz_SF;121_ECPNomHz;;1.000000;0.000000;Hz;1
131;3;40286;U16;;121_ConnPh;;1.000000;0.000000;;1
132;3;40287;I16;;121_WMax_SF;;1.000000;0.000000;;1
133;3;40288;I16;;121_VRef_SF;;1.000000;0.000000;;1
134;3;40289;I16;;121_VRefOfs_SF;;1.000000;0.000000;;1
135;3;40290;I16;;121_VMinMax_SF;;1.000000;0.000000;;1
136;3;40291;I16;;121_VAMax_SF;;1.000000;0.000000;;1
137;3;40292;I16;;121_VArMax_SF;;1.000000;0.000000;;1
138;3;40293;I16;;121_WGra_SF;;1.000000;0.000000;;1
139;3;40294;I16;;121_PFMin_SF;;1.000000;0.000000;;1
140;3;40295;I16;;121_MaxRmpRte_SF;;1.000000;0.000000;;1
141;3;40296;I16;;121_ECPNomHz_SF;;1.000000;0.000000;;1
142;3;40297;I16;;122_tableId;;1.000000;0.000000;;1
143;3;40298;I16;;122_tableSize;;1.000000;0.000000;;1
144;3;40299;U16;;122_PVConn;;1.000000;0.000000;;1
145;3;40300;U16;;122_StorConn;;1.000000;0.000000;;1
146;3;40301;U16;;122_ECPConn;;1.000000;0.000000;;1
147;3;40302;U64;;122_ActWh;;1.000000;0.000000;Wh;1
148;3;40306;U64;;122_ActVAh;;1.000000;0.000000;VAh;1
149;3;40310;U64;;122_ActVArhQ1;;1.000000;0.000000;varh;1
150;3;40314;U64;;122_ActVArhQ2;;1.000000;0.000000;varh;1
151;3;40318;U64;;122_ActVArhQ3;;1.000000;0.000000;varh;1
152;3;40322;U64;;122_ActVArhQ4;;1.000000;0.000000;varh;1
153;3;40326;I16;122_VArAval_SF;122_VArAval;;1.000000;0.000000;var;1
154;3;40327;I16;;122_VArAval_SF;;1.000000;0.000000;;1
155;3;40328;U16;122_WAval_SF;122_WAval;;1.000000;0.000000;var;1
156;3;40329;I16;;122_WAval_SF;;1.000000;0.000000;;1
157;3;40330;U32;;122_StSetLimMsk;;1.000000;0.000000;;1
158;3;40332;U32;;122_StActCtl;;1.000000;0.000000;;1
159;3;40334_8;STRING;;122_TmSrc;;1.000000;0.000000;;1
160;3;40338;U32;;122_Tms;;1.000000;0.000000;Secs;1
161;3;40340;U16;;122_RtSt;;1.000000;0.000000;;1
162;3;40341;U16;122_Ris_SF;122_Ris;;1.000000;0.000000;ohms;1
163;3;40342;I16;;122_Ris_SF;;1.000000;0.000000;;1
164;3;40343;I16;;123_tableId;;1.000000;0.000000;;1
165;3;40344;I16;;123_tableSize;;1.000000;0.000000;;1
166;3;40345;U16;;123_Conn_WinTms;;1.000000;0.000000;Secs;4
```

```
167;3;40346;U16;;123_Conn_RvrtTms;;1.000000;0.000000;Secs;4
168;3;40347;U16;;123_Conn;;1.000000;0.000000;;4
169;3;40348;U16;123_WMaxLimPct_SF;123_WMaxLimPct;cmdPwrPercent;1.000000;0.000000;% WMax;4
170;3;40349;U16;;123_WMaxLimPct_WinTms;;1.000000;0.000000;Secs;4
171;3;40350;U16;;123_WMaxLimPct_RvrtTms;;1.000000;0.000000;Secs;4
172;3;40351;U16;;123_WMaxLimPct_RmpTms;WMaxLimPct_RmpTms;1.000000;0.000000;Secs;4
173;3;40352;U16;;123_WMaxLim_Ena;;1.000000;0.000000;;4
174;3;40353;I16;123_OutPFSet_SF;123_OutPFSet;;1.000000;0.000000;cos();4
175;3;40354;U16;;123_OutPFSet_WinTms;;1.000000;0.000000;Secs;4
176;3;40355;U16;;123_OutPFSet_RvrtTms;;1.000000;0.000000;Secs;4
177;3;40356;U16;;123_OutPFSet_RmpTms;;1.000000;0.000000;Secs;4
178;3;40357;U16;;123_OutPFSet_Ena;;1.000000;0.000000;;4
179;3;40358;I16;123_VArPct_SF;123_VArWMaxPct;;1.000000;0.000000;% WMax;4
180;3;40359;I16;123_VArPct_SF;123_VArMaxPct;;1.000000;0.000000;% VArMax;4
181;3;40360;I16;123_VArPct_SF;123_VArAvalPct;;1.000000;0.000000;% VArAval;4
182;3;40361;U16;;123_VArPct_WinTms;;1.000000;0.000000;Secs;4
183;3;40362;U16;;123_VArPct_RvrtTms;;1.000000;0.000000;Secs;4
184;3;40363;U16;;123_VArPct_RmpTms;;1.000000;0.000000;Secs;4
185;3;40364;U16;;123_VArPct_Mod;;1.000000;0.000000;;4
186;3;40365;U16;;123_VArPct_Ena;;1.000000;0.000000;;4
187;3;40366;I16;;123_WMaxLimPct_SF;;1.000000;0.000000;;4
188;3;40367;I16;;123_OutPFSet_SF;;1.000000;0.000000;;4
189;3;40368;I16;;123_VArPct_SF;;1.000000;0.000000;;4
190;3;40369;I16;;124_tableId;;1.000000;0.000000;;1
191;3;40370;I16;;124_tableSize;;1.000000;0.000000;;1
192;3;40371;U16;124_WChaMax_SF;124_WChaMax;;1.000000;0.000000;W;1
193;3;40372;U16;124_WChaDisChaGra_SF;124_WChaGra;;1.000000;0.000000;% WChaMax/sec;1
194;3;40373;U16;124_WChaDisChaGra_SF;124_WDisChaGra;;1.000000;0.000000;% WChaMax/sec;1
195;3;40374;U16;;124_StorCtl_Mod;;1.000000;0.000000;;1
196;3;40375;U16;124_VAChaMax_SF;124_VAChaMax;;1.000000;0.000000;VA;1
197;3;40376;U16;124_MinRsvPct_SF;124_MinRsvPct;;1.000000;0.000000;% WChaMax;1
198;3;40377;U16;124_ChaState_SF;124_ChaState;;1.000000;0.000000;% AhrRtg;1
199;3;40378;U16;124_StorAval_SF;124_StorAval;;1.000000;0.000000;AH;1
200;3;40379;U16;124_InBatV_SF;124_InBatV;;1.000000;0.000000;V;1
201;3;40380;U16;;124_ChaSt;;1.000000;0.000000;;1
202;3;40381;I16;124_InOutWRte_SF;124_OutWRte;;1.000000;0.000000;% WDisChaMax;1
203;3;40382;I16;124_InOutWRte_SF;124_InWRte;;1.000000;0.000000; % WChaMax;1
204;3;40383;U16;;124_InOutWRte_WinTms;;1.000000;0.000000;Secs;1
205;3;40384;U16;;124_InOutWRte_RvrtTms;;1.000000;0.000000;Secs;1
206;3;40385;U16;;124_InOutWRte_RmpTms;;1.000000;0.000000
```

```
207;3;40386;U16;;124_ChaGriSet;;1.000000;0.000000;;1
208;3;40387;I16;;124_WChaMax_SF;;1.000000;0.000000;;1
209;3;40388;I16;;124_WChaDisChaGra_SF;;1.000000;0.000000;;1
210;3;40389;I16;;124_VAChaMax_SF;;1.000000;0.000000;;1
211;3;40390;I16;;124_MinRsvPct_SF;;1.000000;0.000000;;1
212;3;40391;I16;;124_ChaState_SF;;1.000000;0.000000;;1
213;3;40392;I16;;124_StorAval_SF;;1.000000;0.000000;;1
214;3;40393;I16;;124_InBatV_SF;;1.000000;0.000000;;1
215;3;40394;I16;;124_InOutWRte_SF;;1.000000;0.000000;;1
216;3;40395;I16;;126_tableId;;1.000000;0.000000;;1
217;3;40396;I16;;126_tableSize;;1.000000;0.000000;;1
218;3;40397;U16;;126_ActCrv;;1.000000;0.000000;;1
219;3;40398;U16;;126_ModEna;;1.000000;0.000000;;1
220;3;40399;U16;;126_WinTms;;1.000000;0.000000;Secs;1
221;3;40400;U16;;126_RvrtTms;;1.000000;0.000000;Secs;1
222;3;40401;U16;;126_RmpTms;;1.000000;0.000000;Secs;1
223;3;40402;U16;;126_NCrv;;1.000000;0.000000;;1
224;3;40403;U16;;126_NPt;;1.000000;0.000000;;1
225;3;40404;I16;;126_V_SF;;1.000000;0.000000;;1
226;3;40405;I16;;126_DeptRef_SF;;1.000000;0.000000;;1
227;3;40406;I16;;126_RmpIncDec_SF;;1.000000;0.000000;;1
228;3;40407;U16;;126_0_ActPt;;1.000000;0.000000;;1
229;3;40408;U16;;126_0_DeptRef;;1.000000;0.000000;;1
230;3;40409;U16;126_V_SF;126_0_V1;;1.000000;0.000000;% VRef;1
231;3;40410;I16;126_DeptRef_SF;126_0_VAr1;;1.000000;0.000000;;1
232;3;40411;U16;126_V_SF;126_0_V2;;1.000000;0.000000;% VRef;1
233;3;40412;I16;126_DeptRef_SF;126_0_VAr2;;1.000000;0.000000;;1
234;3;40413;U16;126_V_SF;126_0_V3;;1.000000;0.000000;% VRef;1
235;3;40414;I16;126_DeptRef_SF;126_0_VAr3;;1.000000;0.000000;Various;1
236;3;40415;U16;126_V_SF;126_0_V4;;1.000000;0.000000;;1
237;3;40416;I16;126_DeptRef_SF;126_0_VAr4;;1.000000;0.000000;;1
238;3;40417;U16;126_V_SF;126_0_V5;;1.000000;0.000000;% VRef;1
239;3;40418;I16;126_DeptRef_SF;126_0_VAr5;;1.000000;0.000000;;1
240;3;40419;U16;126_V_SF;126_0_V6;;1.000000;0.000000;% VRef;1
241;3;40420;I16;126_DeptRef_SF;126_0_VAr6;;1.000000;0.000000;;1
242;3;40421;U16;126_V_SF;126_0_V7;;1.000000;0.000000;% VRef;1
243;3;40422;I16;126_DeptRef_SF;126_0_VAr7;;1.000000;0.000000;;1
244;3;40423;U16;126_V_SF;126_0_V8;;1.000000;0.000000;% VRef;1
245;3;40424;I16;126_DeptRef_SF;126_0_VAr8;;1.000000;0.000000;;1
246;3;40425;U16;126_V_SF;126_0_V9;;1.000000;0.000000;% VRef;1
247;3;40426;I16;126_DeptRef_SF;126_0_VAr9;;1.000000;0.000000;;1
```

```
248;3;40427;U16;126_V_SF;126_0_V10;;1.000000;0.000000;% VRef;1
249;3;40428;I16;126_DeptRef_SF;126_0_VAr10;;1.000000;0.000000;;1
250;3;40429;U16;126_V_SF;126_0_V11;;1.000000;0.000000;% VRef;1
251;3;40430;I16;126_DeptRef_SF;126_0_VAr11;;1.000000;0.000000;;1
252;3;40431;U16;126_V_SF;126_0_V12;;1.000000;0.000000;% VRef;1
253;3;40432;I16;126_DeptRef_SF;126_0_VAr12;;1.000000;0.000000;;1
254;3;40433;U16;126_V_SF;126_0_V13;;1.000000;0.000000;% VRef;1
255;3;40434;I16;126_DeptRef_SF;126_0_VAr13;;1.000000;0.000000;;1
256;3;40435;U16;126_V_SF;126_0_V14;;1.000000;0.000000;% VRef;1
257;3;40436;I16;126_DeptRef_SF;126_0_VAr14;;1.000000;0.000000;;1
258;3;40437;U16;126_V_SF;126_0_V15;;1.000000;0.000000;% VRef;1
259;3;40438;I16;126_DeptRef_SF;126_0_VAr15;;1.000000;0.000000;;1
260;3;40439;U16;126_V_SF;126_0_V16;;1.000000;0.000000;% VRef;1
261;3;40440;I16;126_DeptRef_SF;126_0_VAr16;;1.000000;0.000000;;1
262;3;40441;U16;126_V_SF;126_0_V17;;1.000000;0.000000;% VRef;1
263;3;40442;I16;126_DeptRef_SF;126_0_VAr17;;1.000000;0.000000;;1
264;3;40443;U16;126_V_SF;126_0_V18;;1.000000;0.000000;% VRef;1
265;3;40444;I16;126_DeptRef_SF;126_0_VAr18;;1.000000;0.000000;;1
266;3;40445;U16;126_V_SF;126_0_V19;;1.000000;0.000000;% VRef;1
267;3;40446;I16;126_DeptRef_SF;126_0_VAr19;;1.000000;0.000000;;1
268;3;40447;U16;126_V_SF;126_0_V20;;1.000000;0.000000;% VRef;1
269;3;40448;I16;126_DeptRef_SF;126_0_VAr20;;1.000000;0.000000;;1
270;3;40449_16;STRING;;126_0_CrvNam;;1.000000;0.000000;;1
271;3;40457;U16;;126_0_RmpTms;;1.000000;0.000000;Secs;1
272;3;40458;U16;126_RmpIncDec_SF;126_0_RmpDecTmm;;1.000000;0.000000;% ref_value/
min;1
273;3;40459;U16;126_RmpIncDec_SF;126_0_RmpIncTmm;;1.000000;0.000000;% ref_value/
min;1
274;3;40460;U16;;126_0_ReadOnly;;1.000000;0.000000;;1
275;3;40461;I16;;127_tableId;;1.000000;0.000000;;1
276;3;40462;I16;;127_tableSize;;1.000000;0.000000;;1
277;3;40463;U16;127_WGra_SF;127_WGra;;1.000000;0.000000;% PM/Hz;1
278;3;40464;I16;127_HzStrStop_SF;127_HzStr;;1.000000;0.000000;Hz;1
279;3;40465;I16;127_HzStrStop_SF;127_HzStop;;1.000000;0.000000;Hz;1
280;3;40466;U16;;127_HysEna;;1.000000;0.000000;;1
281;3;40467;U16;;127_ModEna;;1.000000;0.000000;;1
282;3;40468;U16;127_RmpIncDec_SF;127_HzStopWGra;;1.000000;0.000000;% WMax/min;1
283;3;40469;I16;;127_WGra_SF;;1.000000;0.000000;;1
284;3;40470;I16;;127_HzStrStop_SF;;1.000000;0.000000;;1
285;3;40471;I16;;127_RmpIncDec_SF;;1.000000;0.000000;;1
287;3;40473;I16;;128_tableId;;1.000000;0.000000;;1
288;3;40474;I16;;128_tableSize;;1.000000;0.000000;;1
```

```
289;3;40475;U16;;128_ArGraMod;;1.000000;0.000000;;1
290;3;40476;U16;128_ArGra_SF;128_ArGraSag;;1.000000;0.000000;%ARtg/%dV;1
291;3;40477;U16;128_ArGra_SF;128_ArGraSwell;;1.000000;0.000000;%ARtg/%dV;1
292;3;40478;U16;;128_ModEna;;1.000000;0.000000;;1
293;3;40479;U16;;128_FilTms;;1.000000;0.000000;Secs;1
294;3;40480;U16;128_VRefPct_SF;128_DbVMin;;1.000000;0.000000;% VRef;1
295;3;40481;U16;128_VRefPct_SF;128_DbVMax;;1.000000;0.000000;% VRef;1
296;3;40482;U16;128_VRefPct_SF;128_BlkZnV;;1.000000;0.000000;% VRef;1
297;3;40483;U16;128_VRefPct_SF;128_HysBlkZnV;;1.000000;0.000000;% VRef;1
298;3;40484;U16;;128_BlkZnTmms;;1.000000;0.000000;mSecs;1
299;3;40485;U16;;128_HoldTmms;;1.000000;0.000000;mSecs;1
300;3;40486;I16;;128_ArGra_SF;;1.000000;0.000000;;1
301;3;40487;I16;;128_VRefPct_SF;;1.000000;0.000000;;1
303;3;40489;I16;;131_tableId;;1.000000;0.000000;;1
304;3;40490;I16;;131_tableSize;;1.000000;0.000000;;1
305;3;40491;U16;;131_ActCrv;;1.000000;0.000000;;1
306;3;40492;U16;;131_ModEna;;1.000000;0.000000;;1
307;3;40493;U16;;131_WinTms;;1.000000;0.000000;Secs;1
308;3;40494;U16;;131_RvrtTms;;1.000000;0.000000;Secs;1
309;3;40495;U16;;131_RmpTms;;1.000000;0.000000;Secs;1
310;3;40496;U16;;131_NCrv;;1.000000;0.000000;;1
311;3;40497;U16;;131_NPt;;1.000000;0.000000;;1
312;3;40498;I16;;131_W_SF;;1.000000;0.000000;;1
313;3;40499;I16;;131_PF_SF;;1.000000;0.000000;;1
314;3;40500;I16;;131_RmpIncDec_SF;;1.000000;0.000000;;1
315;3;40501;U16;;131_0_ActPt;;1.000000;0.000000;;1
316;3;40502;I16;131_W_SF;131_0_W1;;1.000000;0.000000;% WMax;1
317;3;40503;I16;131_PF_SF;131_0_PF1;;1.000000;0.000000;cos();1
318;3;40504;I16;131_W_SF;131_0_W2;;1.000000;0.000000;% WMax;1
319;3;40505;I16;131_PF_SF;131_0_PF2;;1.000000;0.000000;cos();1
320;3;40506;I16;131_W_SF;131_0_W3;;1.000000;0.000000;% WMax;1
321;3;40507;I16;131_PF_SF;131_0_PF3;;1.000000;0.000000;cos();1
322;3;40508;I16;131_W_SF;131_0_W4;;1.000000;0.000000;% WMax;1
323;3;40509;I16;131_PF_SF;131_0_PF4;;1.000000;0.000000;cos();1
324;3;40510;I16;131_W_SF;131_0_W5;;1.000000;0.000000;% WMax;1
325;3;40511;I16;131_PF_SF;131_0_PF5;;1.000000;0.000000;cos();1
326;3;40512;I16;131_W_SF;131_0_W6;;1.000000;0.000000;% WMax;1
327;3;40513;I16;131_PF_SF;131_0_PF6;;1.000000;0.000000;cos();1
328;3;40514;I16;131_W_SF;131_0_W7;;1.000000;0.000000;% WMax;1
329;3;40515;I16;131_PF_SF;131_0_PF7;;1.000000;0.000000;cos();1
330;3;40516;I16;131_W_SF;131_0_W8;;1.000000;0.000000;% WMax;1
```

```
331;3;40517;I16;131_PF_SF;131_0_PF8;;1.000000;0.000000;cos();1
332;3;40518;I16;131_W_SF;131_0_W9;;1.000000;0.000000;% WMax;1
333;3;40519;I16;131_PF_SF;131_0_PF9;;1.000000;0.000000;cos();1
334;3;40520;I16;131_W_SF;131_0_W10;;1.000000;0.000000;% WMax;1
335;3;40521;I16;131_PF_SF;131_0_PF10;;1.000000;0.000000;cos();1
336;3;40522;I16;131_W_SF;131_0_W11;;1.000000;0.000000;% WMax;1
337;3;40523;I16;131_PF_SF;131_0_PF11;;1.000000;0.000000;cos();1
338;3;40524;I16;131_W_SF;131_0_W12;;1.000000;0.000000;% WMax;1
339;3;40525;I16;131_PF_SF;131_0_PF12;;1.000000;0.000000;cos();1
340;3;40526;I16;131_W_SF;131_0_W13;;1.000000;0.000000;% WMax;1
341;3;40527;I16;131_PF_SF;131_0_PF13;;1.000000;0.000000;cos();1
342;3;40528;I16;131_W_SF;131_0_W14;;1.000000;0.000000;% WMax;1
343;3;40529;I16;131_PF_SF;131_0_PF14;;1.000000;0.000000;cos();1
344;3;40530;I16;131_W_SF;131_0_W15;;1.000000;0.000000;% WMax;1
345;3;40531;I16;131_PF_SF;131_0_PF15;;1.000000;0.000000;cos();1
346;3;40532;I16;131_W_SF;131_0_W16;;1.000000;0.000000;% WMax;1
347;3;40533;I16;131_PF_SF;131_0_PF16;;1.000000;0.000000;cos();1
348;3;40534;I16;131_W_SF;131_0_W17;;1.000000;0.000000;% WMax;1
349;3;40535;I16;131_PF_SF;131_0_PF17;;1.000000;0.000000;cos();1
350;3;40536;I16;131_W_SF;131_0_W18;;1.000000;0.000000;% WMax;1
351;3;40537;I16;131_PF_SF;131_0_PF18;;1.000000;0.000000;cos();1
352;3;40538;I16;131_W_SF;131_0_W19;;1.000000;0.000000;% WMax;1
353;3;40539;I16;131_PF_SF;131_0_PF19;;1.000000;0.000000;cos();1
354;3;40540;I16;131_W_SF;131_0_W20;;1.000000;0.000000;% WMax;1
355;3;40541;I16;131_PF_SF;131_0_PF20;;1.000000;0.000000;cos();1
356;3;40542_16;STRING;;131_0_CrvNam;;1.000000;0.000000;;1
357;3;40550;U16;;131_0_RmpPT1Tms;;1.000000;0.000000;Secs;1
358;3;40551;U16;131_RmpIncDec_SF;131_0_RmpDecTmm;;1.000000;0.000000;% PF/min;1
359;3;40552;U16;131_RmpIncDec_SF;131_0_RmpIncTmm;;1.000000;0.000000;% PF/min;1
360;3;40553;U16;;131_0_ReadOnly;;1.000000;0.000000;;1
362;3;40555;I16;;132_tableId;;1.000000;0.000000;;1
363;3;40556;I16;;132_tableSize;;1.000000;0.000000;;1
364;3;40557;U16;;132_ActCrv;;1.000000;0.000000;;1
365;3;40558;U16;;132_ModEna;;1.000000;0.000000;;1
366;3;40559;U16;;132_WinTms;;1.000000;0.000000;Secs;1
367;3;40560;U16;;132_RvrtTms;;1.000000;0.000000;Secs;1
368;3;40561;U16;;132_RmpTms;;1.000000;0.000000;Secs;1
369;3;40562;U16;;132_NCrv;;1.000000;0.000000;;1
370;3;40563;U16;;132_NPt;;1.000000;0.000000;;1
371;3;40564;I16;;132_V_SF;;1.000000;0.000000;;1
372;3;40565;I16;;132_DeptRef_SF;;1.000000;0.000000;;1
```

```
373;3;40566;I16;;132_RmpIncDec_SF;;1.000000;0.000000;;1
374;3;40567;U16;;132_0_ActPt;;1.000000;0.000000;;1
375;3;40568;U16;;132_0_DeptRef;;1.000000;0.000000;;1
376;3;40569;U16;132_V_SF;132_0_V1;;1.000000;0.000000;% VRef;1
377;3;40570;I16;132_DeptRef_SF;132_0_W1;;1.000000;0.000000;% VRef;1
378;3;40571;U16;132_V_SF;132_0_V2;;1.000000;0.000000;% VRef;1
379;3;40572;I16;132_DeptRef_SF;132_0_W2;;1.000000;0.000000;% VRef;1
380;3;40573;U16;132_V_SF;132_0_V3;;1.000000;0.000000;% VRef;1
381;3;40574;I16;132_DeptRef_SF;132_0_W3;;1.000000;0.000000;% VRef;1
382;3;40575;U16;132_V_SF;132_0_V4;;1.000000;0.000000;% VRef;1
383;3;40576;I16;132_DeptRef_SF;132_0_W4;;1.000000;0.000000;% VRef;1
384;3;40577;U16;132_V_SF;132_0_V5;;1.000000;0.000000;% VRef;1
385;3;40578;I16;132_DeptRef_SF;132_0_W5;;1.000000;0.000000;% VRef;1
386;3;40579;U16;132_V_SF;132_0_V6;;1.000000;0.000000;% VRef;1
387;3;40580;I16;132_DeptRef_SF;132_0_W6;;1.000000;0.000000;% VRef;1
388;3;40581;U16;132_V_SF;132_0_V7;;1.000000;0.000000;% VRef;1
389;3;40582;I16;132_DeptRef_SF;132_0_W7;;1.000000;0.000000;% VRef;1
390;3;40583;U16;132_V_SF;132_0_V8;;1.000000;0.000000;% VRef;1
391;3;40584;I16;132_DeptRef_SF;132_0_W8;;1.000000;0.000000;% VRef;1
392;3;40585;U16;132_V_SF;132_0_V9;;1.000000;0.000000;% VRef;1
393;3;40586;I16;132_DeptRef_SF;132_0_W9;;1.000000;0.000000;% VRef;1
394;3;40587;U16;132_V_SF;132_0_V10;;1.000000;0.000000;% VRef;1
395;3;40588;I16;132_DeptRef_SF;132_0_W10;;1.000000;0.000000;% VRef;1
396;3;40589;U16;132_V_SF;132_0_V11;;1.000000;0.000000;% VRef;1
397;3;40590;I16;132_DeptRef_SF;132_0_W11;;1.000000;0.000000;% VRef;1
398;3;40591;U16;132_V_SF;132_0_V12;;1.000000;0.000000;% VRef;1
399;3;40592;I16;132_DeptRef_SF;132_0_W12;;1.000000;0.000000;% VRef;1
400;3;40593;U16;132_V_SF;132_0_V13;;1.000000;0.000000;% VRef;1
401;3;40594;I16;132_DeptRef_SF;132_0_W13;;1.000000;0.000000;% VRef;1
402;3;40595;U16;132_V_SF;132_0_V14;;1.000000;0.000000;% VRef;1
403;3;40596;I16;132_DeptRef_SF;132_0_W14;;1.000000;0.000000;% VRef;1
404;3;40597;U16;132_V_SF;132_0_V15;;1.000000;0.000000;% VRef;1
405;3;40598;I16;132_DeptRef_SF;132_0_W15;;1.000000;0.000000;% VRef;1
406;3;40599;U16;132_V_SF;132_0_V16;;1.000000;0.000000;% VRef;1
407;3;40600;I16;132_DeptRef_SF;132_0_W16;;1.000000;0.000000;% VRef;1
408;3;40601;U16;132_V_SF;132_0_V17;;1.000000;0.000000;% VRef;1
409;3;40602;I16;132_DeptRef_SF;132_0_W17;;1.000000;0.000000;% VRef;1
410;3;40603;U16;132_V_SF;132_0_V18;;1.000000;0.000000;% VRef;1
411;3;40604;I16;132_DeptRef_SF;132_0_W18;;1.000000;0.000000;% VRef;1
412;3;40605;U16;132_V_SF;132_0_V19;;1.000000;0.000000;% VRef;1
413;3;40606;I16;132_DeptRef_SF;132_0_W19;;1.000000;0.000000;% VRef;1
```

```
414;3;40607;U16;132_V_SF;132_0_V20;;1.000000;0.000000;% VRef;1
415;3;40608;I16;132_DeptRef_SF;132_0_W20;;1.000000;0.000000;% VRef;1
416;3;40609_16;STRING;;132_0_CrvNam;;1.000000;0.000000;;1
417;3;40617;U16;;132_0_RmpPt1Tms;;1.000000;0.000000;Secs;1
418;3;40618;U16;132_RmpIncDec_SF;132_0_RmpDecTmm;;1.000000;0.000000;% WMax/min;1
419;3;40619;U16;132_RmpIncDec_SF;132_0_RmpIncTmm;;1.000000;0.000000;% WMax/min;1
420;3;40620;U16;;132_0_ReadOnly;;1.000000;0.000000;;1
421;3;40621;I16;;160_tableId;;1.000000;0.000000;;1
422;3;40622;I16;;160_tableSize;;1.000000;0.000000;;1
423;3;40623;I16;;160_DCA_SF;;1.000000;0.000000;;4
424;3;40624;I16;;160_DCV_SF;;1.000000;0.000000;;4
425;3;40625;I16;;160_DCW_SF;;1.000000;0.000000;;4
426;3;40626;I16;;160_DCWH_SF;;1.000000;0.000000;;4
427;3;40627;U32;;160_Evt;;1.000000;0.000000;;4
428;3;40629;U32;;160_N;;1.000000;0.000000;;4
429;3;40630;U16;;160_TmsPer;;1.000000;0.000000;;4
430;3;40631;U16;;160_0_ID;;1.000000;0.000000;;4
431;3;40632_16;STRING;;160_0_IDStr;;1.000000;0.000000;;4
432;3;40640;U16;160_DCA_SF;160_0_DCA;;1.000000;0.000000;A;4
433;3;40641;U16;160_DCV_SF;160_0_DCV;;1.000000;0.000000;V;4
434;3;40642;U16;160_DCW_SF;160_0_DCW;;1.000000;0.000000;W;4
435;3;40643;U32;160_DCWH_SF;160_0_DCWH;;1.000000;0.000000;Wh;4
436;3;40645;U32;;160_0_Tms;;1.000000;0.000000;Secs;4
437;3;40647;I16;;160_0_Tmp;;1.000000;0.000000;C;4
438;3;40648;U16;;160_0_DCSt;;1.000000;0.000000;;4
439;3;40649;U32;;160_0_DCEvt;;1.000000;0.000000;;4
440;3;40651;U16;;160_1_ID;;1.000000;0.000000;;4
441;3;40652_16;STRING;;160_1_IDStr;;1.000000;0.000000;;4
442;3;40660;U16;160_DCA_SF;160_1_DCA;;1.000000;0.000000;A;4
443;3;40661;U16;160_DCV_SF;160_1_DCV;;1.000000;0.000000;V;4
444;3;40662;U16;160_DCW_SF;160_1_DCW;;1.000000;0.000000;W;4
445;3;40663;U32;160_DCWH_SF;160_1_DCWH;;1.000000;0.000000;Wh;4
446;3;40665;U32;;160_1_Tms;;1.000000;0.000000;Secs;4
447;3;40667;I16;;160_1_Tmp;;1.000000;0.000000;C;4
448;3;40668;U16;;160_1_DCSt;;1.000000;0.000000;;4
449;3;40669;U32;;160_1_DCEvt;;1.000000;0.000000;;4
450;3;40671;U16;;160_2_ID;;1.000000;0.000000;;4
451;3;40672_16;STRING;;160_2_IDStr;;1.000000;0.000000;;4
452;3;40680;U16;160_DCA_SF;160_2_DCA;;1.000000;0.000000;A;4
453;3;40681;U16;160_DCV_SF;160_2_DCV;;1.000000;0.000000;V;4
454;3;40682;U16;160_DCW_SF;160_2_DCW;;1.000000;0.000000;W;4
```

```
455;3;40683;U32;160_DCWH_SF;160_2_DCWH;;1.000000;0.000000;Wh;4
456;3;40685;U32;;160_2_Tms;;1.000000;0.000000;Secs;4
457;3;40687;I16;;160_2_Tmp;;1.000000;0.000000;C;4
458;3;40688;U16;;160_2_DCSt;;1.000000;0.000000;;4
459;3;40689;U32;;160_2_DCEvt;;1.000000;0.000000;;4
460;3;40691;U16;;160_3_ID;;1.000000;0.000000;;4
461;3;40692_16;STRING;;160_3_IDStr;;1.000000;0.000000;;4
462;3;40700;U16;160_DCA_SF;160_3_DCA;;1.000000;0.000000;A;4
463;3;40701;U16;160_DCV_SF;160_3_DCV;;1.000000;0.000000;V;4
464;3;40702;U16;160_DCW_SF;160_3_DCW;;1.000000;0.000000;W;4
465;3;40703;U32;160_DCWH_SF;160_3_DCWH;;1.000000;0.000000;Wh;4
466;3;40705;U32;;160_3_Tms;;1.000000;0.000000;Secs;4
467;3;40707;I16;;160_3_Tmp;;1.000000;0.000000;C;4
468;3;40708;U16;;160_3_DCSt;;1.000000;0.000000;;4
469;3;40709;U32;;160_3_DCEvt;;1.000000;0.000000;;4
470;3;40711;U16;;160_4_ID;;1.000000;0.000000;;4
471;3;40712_16;STRING;;160_4_IDStr;;1.000000;0.000000;;4
472;3;40720;U16;160_DCA_SF;160_4_DCA;;1.000000;0.000000;A;4
473;3;40721;U16;160_DCV_SF;160_4_DCV;;1.000000;0.000000;V;4
474;3;40722;U16;160_DCW_SF;160_4_DCW;;1.000000;0.000000;W;4
475;3;40723;U32;160_DCWH_SF;160_4_DCWH;;1.000000;0.000000;Wh;4
476;3;40725;U32;;160_4_Tms;;1.000000;0.000000;Secs;4
477;3;40727;I16;;160_4_Tmp;;1.000000;0.000000;C;4
478;3;40728;U16;;160_4_DCSt;;1.000000;0.000000;;4
479;3;40729;U32;;160_4_DCEvt;;1.000000;0.000000;;4
480;3;40731;U16;;160_5_ID;;1.000000;0.000000;;4
481;3;40732_16;STRING;;160_5_IDStr;;1.000000;0.000000;;4
482;3;40740;U16;160_DCA_SF;160_5_DCA;;1.000000;0.000000;A;4
483;3;40741;U16;160_DCV_SF;160_5_DCV;;1.000000;0.000000;V;4
484;3;40742;U16;160_DCW_SF;160_5_DCW;;1.000000;0.000000;W;4
485;3;40743;U32;160_DCWH_SF;160_5_DCWH;;1.000000;0.000000;Wh;4
486;3;40745;U32;;160_5_Tms;;1.000000;0.000000;Secs;4
487;3;40747;I16;;160_5_Tmp;;1.000000;0.000000;C;4
488;3;40748;U16;;160_5_DCSt;;1.000000;0.000000;;4
489;3;40749;U32;;160_5_DCEvt;;1.000000;0.000000;;4
490;3;40751;I16;;129_tableId;;1.000000;0.000000;;1
491;3;40752;I16;;129_tableSize;;1.000000;0.000000;;1
492;3;40753;U16;;129_ActCrv;;1.000000;0.000000;;1
493;3;40754;U16;;129_ModEna;;1.000000;0.000000;;1
494;3;40755;U16;;129_WinTms;;1.000000;0.000000;Secs;1
495;3;40756;U16;;129_RvrtTms;;1.000000;0.000000;Secs;1
```

```
496;3;40757;U16;;129_RmpTms;;1.000000;0.000000;Secs;1
497;3;40758;U16;;129_NCrv;;1.000000;0.000000;;1
498;3;40759;U16;;129_NPt;;1.000000;0.000000;;1
499;3;40760;I16;;129_Tms_SF;;1.000000;0.000000;;1
500;3;40761;I16;;129_V_SF;;1.000000;0.000000;;1
502;3;40763;U16;;129_0_ActPt;;1.000000;0.000000;;1
503;3;40764;U16;129_Tms_SF;129_0_Tms1;;1.000000;0.000000;Secs;1
504;3;40765;U16;129_V_SF;129_0_V1;;1.000000;0.000000;% VRef;1
505;3;40766;U16;129_Tms_SF;129_0_Tms2;;1.000000;0.000000;Secs;1
506;3;40767;U16;129_V_SF;129_0_V2;;1.000000;0.000000;% VRef;1
507;3;40768;U16;129_Tms_SF;129_0_Tms3;;1.000000;0.000000;Secs;1
508;3;40769;U16;129_V_SF;129_0_V3;;1.000000;0.000000;% VRef;1
509;3;40770;U16;129_Tms_SF;129_0_Tms4;;1.000000;0.000000;Secs;1
510;3;40771;U16;129_V_SF;129_0_V4;;1.000000;0.000000;% VRef;1
511;3;40772;U16;129_Tms_SF;129_0_Tms5;;1.000000;0.000000;Secs;1
512;3;40773;U16;129_V_SF;129_0_V5;;1.000000;0.000000;% VRef;1
513;3;40774;U16;129_Tms_SF;129_0_Tms6;;1.000000;0.000000;Secs;1
514;3;40775;U16;129_V_SF;129_0_V6;;1.000000;0.000000;% VRef;1
515;3;40776;U16;129_Tms_SF;129_0_Tms7;;1.000000;0.000000;Secs;1
516;3;40777;U16;129_V_SF;129_0_V7;;1.000000;0.000000;% VRef;1
517;3;40778;U16;129_Tms_SF;129_0_Tms8;;1.000000;0.000000;Secs;1
518;3;40779;U16;129_V_SF;129_0_V8;;1.000000;0.000000;% VRef;1
519;3;40780;U16;129_Tms_SF;129_0_Tms9;;1.000000;0.000000;Secs;1
520;3;40781;U16;129_V_SF;129_0_V9;;1.000000;0.000000;% VRef;1
521;3;40782;U16;129_Tms_SF;129_0_Tms10;;1.000000;0.000000;Secs;1
522;3;40783;U16;129_V_SF;129_0_V10;;1.000000;0.000000;% VRef;1
523;3;40784;U16;129_Tms_SF;129_0_Tms11;;1.000000;0.000000;Secs;1
524;3;40785;U16;129_V_SF;129_0_V11;;1.000000;0.000000;% VRef;1
525;3;40786;U16;129_Tms_SF;129_0_Tms12;;1.000000;0.000000;Secs;1
526;3;40787;U16;129_V_SF;129_0_V12;;1.000000;0.000000;% VRef;1
527;3;40788;U16;129_Tms_SF;129_0_Tms13;;1.000000;0.000000;Secs;1
528;3;40789;U16;129_V_SF;129_0_V13;;1.000000;0.000000;% VRef;1
529;3;40790;U16;129_Tms_SF;129_0_Tms14;;1.000000;0.000000;Secs;1
530;3;40791;U16;129_V_SF;129_0_V14;;1.000000;0.000000;% VRef;1
531;3;40792;U16;129_Tms_SF;129_0_Tms15;;1.000000;0.000000;Secs;1
532;3;40793;U16;129_V_SF;129_0_V15;;1.000000;0.000000;% VRef;1
533;3;40794;U16;129_Tms_SF;129_0_Tms16;;1.000000;0.000000;Secs;1
534;3;40795;U16;129_V_SF;129_0_V16;;1.000000;0.000000;% VRef;1
535;3;40796;U16;129_Tms_SF;129_0_Tms17;;1.000000;0.000000;Secs;1
536;3;40797;U16;129_V_SF;129_0_V17;;1.000000;0.000000;% VRef;1
537;3;40798;U16;129_Tms_SF;129_0_Tms18;;1.000000;0.000000;Secs;1
```

```
538;3;40799;U16;129_V_SF;129_0_V18;;1.000000;0.000000;% VRef;1
539;3;40800;U16;129_Tms_SF;129_0_Tms19;;1.000000;0.000000;Secs;1
540;3;40801;U16;129_V_SF;129_0_V19;;1.000000;0.000000;% VRef;1
541;3;40802;U16;129_Tms_SF;129_0_Tms20;;1.000000;0.000000;Secs;1
542;3;40803;U16;129_V_SF;129_0_V20;;1.000000;0.000000;% VRef;1
543;3;40804_16;STRING;;129_0_CrvNam;;1.000000;0.000000;;1
544;3;40812;U16;;129_0_ReadOnly;;1.000000;0.000000;;1
545;3;40813;I16;;130_tableId;;1.000000;0.000000;;1
546;3;40814;I16;;130_tableSize;;1.000000;0.000000;;1
547;3;40815;U16;;130_ActCrv;;1.000000;0.000000;;1
548;3;40816;U16;;130_ModEna;;1.000000;0.000000;;1
549;3;40817;U16;;130_WinTms;;1.000000;0.000000;Secs;1
550;3;40818;U16;;130_RvrtTms;;1.000000;0.000000;Secs;1
551;3;40819;U16;;130_RmpTms;;1.000000;0.000000;Secs;1
552;3;40820;U16;;130_NCrv;;1.000000;0.000000;;1
553;3;40821;U16;;130_NPt;;1.000000;0.000000;;1
554;3;40822;I16;;130_Tms_SF;;1.000000;0.000000;;1
555;3;40823;I16;;130_V_SF;;1.000000;0.000000;;1
557;3;40825;U16;;130_0_ActPt;;1.000000;0.000000;;1
558;3;40826;U16;130_Tms_SF;130_0_Tms1;;1.000000;0.000000;Secs;1
559;3;40827;U16;130_V_SF;130_0_V1;;1.000000;0.000000;% VRef;1
560;3;40828;U16;130_Tms_SF;130_0_Tms2;;1.000000;0.000000;Secs;1
561;3;40829;U16;130_V_SF;130_0_V2;;1.000000;0.000000;% VRef;1
562;3;40830;U16;130_Tms_SF;130_0_Tms3;;1.000000;0.000000;Secs;1
563;3;40831;U16;130_V_SF;130_0_V3;;1.000000;0.000000;% VRef;1
564;3;40832;U16;130_Tms_SF;130_0_Tms4;;1.000000;0.000000;Secs;1
565;3;40833;U16;130_V_SF;130_0_V4;;1.000000;0.000000;% VRef;1
566;3;40834;U16;130_Tms_SF;130_0_Tms5;;1.000000;0.000000;Secs;1
567;3;40835;U16;130_V_SF;130_0_V5;;1.000000;0.000000;% VRef;1
568;3;40836;U16;130_Tms_SF;130_0_Tms6;;1.000000;0.000000;Secs;1
569;3;40837;U16;130_V_SF;130_0_V6;;1.000000;0.000000;% VRef;1
570;3;40838;U16;130_Tms_SF;130_0_Tms7;;1.000000;0.000000;Secs;1
571;3;40839;U16;130_V_SF;130_0_V7;;1.000000;0.000000;% VRef;1
572;3;40840;U16;130_Tms_SF;130_0_Tms8;;1.000000;0.000000;Secs;1
573;3;40841;U16;130_V_SF;130_0_V8;;1.000000;0.000000;% VRef;1
574;3;40842;U16;130_Tms_SF;130_0_Tms9;;1.000000;0.000000;Secs;1
575;3;40843;U16;130_V_SF;130_0_V9;;1.000000;0.000000;% VRef;1
576;3;40844;U16;130_Tms_SF;130_0_Tms10;;1.000000;0.000000;Secs;1
577;3;40845;U16;130_V_SF;130_0_V10;;1.000000;0.000000;% VRef;1
578;3;40846;U16;130_Tms_SF;130_0_Tms11;;1.000000;0.000000;Secs;1
579;3;40847;U16;130_V_SF;130_0_V11;;1.000000;0.000000;% VRef;1
```

```
580;3;40848;U16;130_Tms_SF;130_0_Tms12;;1.000000;0.000000;Secs;1
581;3;40849;U16;130_V_SF;130_0_V12;;1.000000;0.000000;% VRef;1
582;3;40850;U16;130_Tms_SF;130_0_Tms13;;1.000000;0.000000;Secs;1
583;3;40851;U16;130_V_SF;130_0_V13;;1.000000;0.000000;% VRef;1
584;3;40852;U16;130_Tms_SF;130_0_Tms14;;1.000000;0.000000;Secs;1
585;3;40853;U16;130_V_SF;130_0_V14;;1.000000;0.000000;% VRef;1
586;3;40854;U16;130_Tms_SF;130_0_Tms15;;1.000000;0.000000;Secs;1
587;3;40855;U16;130_V_SF;130_0_V15;;1.000000;0.000000;% VRef;1
588;3;40856;U16;130_Tms_SF;130_0_Tms16;;1.000000;0.000000;Secs;1
589;3;40857;U16;130_V_SF;130_0_V16;;1.000000;0.000000;% VRef;1
590;3;40858;U16;130_Tms_SF;130_0_Tms17;;1.000000;0.000000;Secs;1
591;3;40859;U16;130_V_SF;130_0_V17;;1.000000;0.000000;% VRef;1
592;3;40860;U16;130_Tms_SF;130_0_Tms18;;1.000000;0.000000;Secs;1
593;3;40861;U16;130_V_SF;130_0_V18;;1.000000;0.000000;% VRef;1
594;3;40862;U16;130_Tms_SF;130_0_Tms19;;1.000000;0.000000;Secs;1
595;3;40863;U16;130_V_SF;130_0_V19;;1.000000;0.000000;% VRef;1
596;3;40864;U16;130_Tms_SF;130_0_Tms20;;1.000000;0.000000;Secs;1
597;3;40865;U16;130_V_SF;130_0_V20;;1.000000;0.000000;% VRef;1
598;3;40866_16;STRING;;130_0_CrvNam;;1.000000;0.000000;;1
599;3;40874;U16;;130_0_ReadOnly;;1.000000;0.000000;;1
```