webdyn
flexitron group

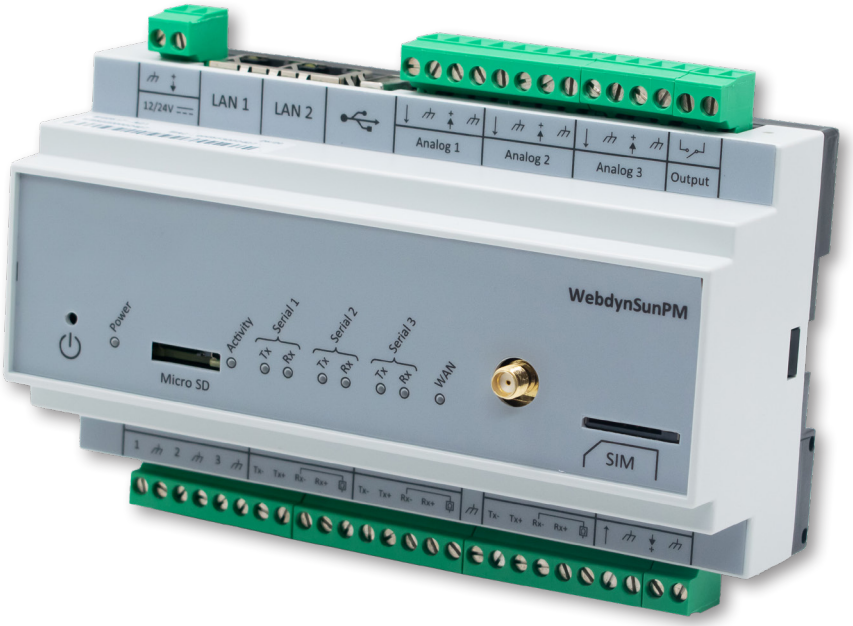

Annex

SMA

www.webdyn.com

Index

SMA 3

1. Supported devices 3

2. Gateway connection to the inverters using SMA-NET and RS485 bus 6

2.1 Wiring SMA-NET inverters using 2-wire RS485 (Half-Duplex): 7

2.1.1 "485BRD-10" communication board: 7

2.1.2 "DM-485CB-10" or "485i-Module" communication board: 8

2.1.3 "MD.485-40" communication board: 9

2.1.4 "Retrofit 485PB-SMC-NR" communication board: 10

3. Connecting the gateway to inverters using SMA Modbus TCP and SunSpec Modbus TCP via Ethernet 11

4. Serial port configuration 12

5. Ethernet port configuration 14

6. Automatic device detection 15

7. SMA-NET device detection 16

8. SMA-NET definition file 19

9. SunSpec Modbus TCP device detection 22

10. SunSpec Modbus TCP definition file 26

11. Adding a SunSpec Modbus TCP device manually 42

12. SMA Modbus TCP definition file 44

SMA

1. Supported devices

SMA inverters are compatible with the following protocols implemented on the WebdynSunPM:

Inverter protocol	Physical interface	Specifications
SMA-net	RS485 2 wires	100 max
SMA Modbus TCP	Ethernet	120 max
SunSpec Modbus TCP	Ethernet	124 max

Automatic detection is only supported for the SMA-net and SunSpec Modbus TCP protocols. All protocols remain manually configurable using the definition files except for the SMA-net protocol.

The maximum number of supported devices may be influenced by the number of variables to be communicated.

On the same physical RS485 interface, the connected inverters must have the same protocol and the same serial configuration.

Communication protocols are available depending on the model and communication board used on the inverter. (see table below).

Communication / Inverter board	SMA-net	SMA Modbus TCP	SunSpec Modbus TCP
485BRD-10 board	Yes		
DM-485CB-10 board or 485i-Module	Yes		
MD.485-40 board	Yes		
485PB-SMC-NR retrofit board	Yes		
SpeedWire board		Yes	Yes
Central Inverters		Yes	Yes

The "485-BDR-10" communication board is compatible with the following inverters:

Inverter model
Sunny Tripower STP 5000TL-20
Sunny Tripower STP 6000TL-20
Sunny Tripower STP 7000TL-20
Sunny Tripower STP 8000TL-20

Inverter model
Sunny Tripower STP 9000TL-20
Sunny Tripower STP 10000TL-20
Sunny Tripower STP 12000TL-20
Windy Tripower WTP 5000TL-20
Windy Tripower WTP 6000TL-20
Windy Tripower WTP 7000TL-20
Windy Tripower WTP 8000TL-20
Windy Tripower WTP 9000TL-20

The "DM-485CB-10" or "485i-Module" communication board is compatible with the following inverters:

Inverter model
Sunny Boy SB 3000TL-20
Sunny Boy SB 3600TL-20
Sunny Boy SB 4000TL-20
Sunny Boy SB 5000TL-20
Sunny Boy SB 3000TL-21
Sunny Boy SB 3600TL-21
Sunny Boy SB 4000TL-21
Sunny Boy SB 5000TL-21
Sunny Boy SB 6000TL-21
Sunny Boy SB 2500TLST-21
Sunny Boy SB 3000TLST-21
Sunny Tripower STP 8000TL-10
Sunny Tripower STP 10000TL-10
Sunny Tripower STP 12000TL-10
Sunny Tripower STP 15000TL-10
Sunny Tripower STP 17000TL-10
Sunny Tripower STP 15000TLHE-10
Sunny Tripower STP 20000TLHE-10
Sunny Tripower STP 15000TLEE-10
Sunny Tripower STP 20000TLEE-10
Sunny Tripower STP 15000TL-30
Sunny Tripower STP 20000TL-30

Inverter model
Sunny Tripower STP 25000TL-30
Windy Tripower WTP 3600TL-20
Windy Tripower WTP 5000TL-20
Windy Tripower WTP 3000TL-21
Windy Tripower WTP 3600TL-21
Windy Tripower WTP 4000TL-21
Windy Tripower WTP 5000TL-21

The "MD.485-40" communication board is compatible with the following inverters:

Inverter model
Sunny Tripower STP 50-40

The "retrofit 485PB-SMC-NR" communication board is compatible with the following inverters:

Inverter model	From the inverter's firmware version
SB 2500TLST-21	02:53:00
SB 3000TLST-21	02:53:00
SB 3000TL-21	02:53:00
SB 3600TL-21	02:53:00
SB 4000TL-21	02:53:00
SB 5000TL-21	02:53:00
SB 6000TL-21	02:53:00
STP 8000TL-10	02:53:00
STP 10000TL-10	02:53:00
STP 12000TL-10	02:53:00
STP 15000TL-10	02:53:00
STP 17000TL-10	02:53:00
STP 15000TLEE-10	02:53:00
STP 15000TLHE-10	02:53:00
STP 15000TL-30	All
STP 20000TL-30	All
STP 25000TL-30	All
STP 20000TLEE-10	02:53:00
STP 20000TLHE-10	02:53:00

The inverter lists are partial and subject to change. Please check compatibility on the SMA website: www.SMA-Solar.com.

2. Gateway connection to the inverters using SMA-NET and RS485 bus

The inverters are connected using SMA-net on one of the WebdynSunPM's three RS485 communication buses. The gateway can be at the end of the RS485 communication bus or in the middle.

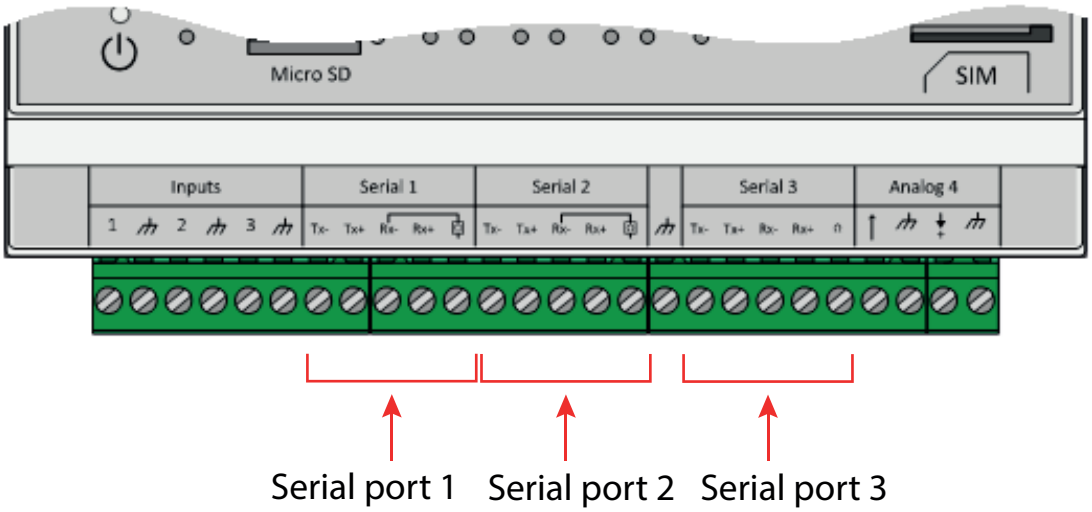

All wiring work must be carried out by a specialised qualified electrician. Before installation, all devices connected to the corresponding communication bus must be disconnected on both sides (DC and AC). Please follow all safety instructions featured in the inverter documentation.

For more details, please refer to the WebdynSunPM user manual.

2.1 Wiring SMA-NET inverters using 2-wire RS485 (Half-Duplex):

To install the communication board, please refer to the communication board manual and your SMA inverter manual.

Wiring example:

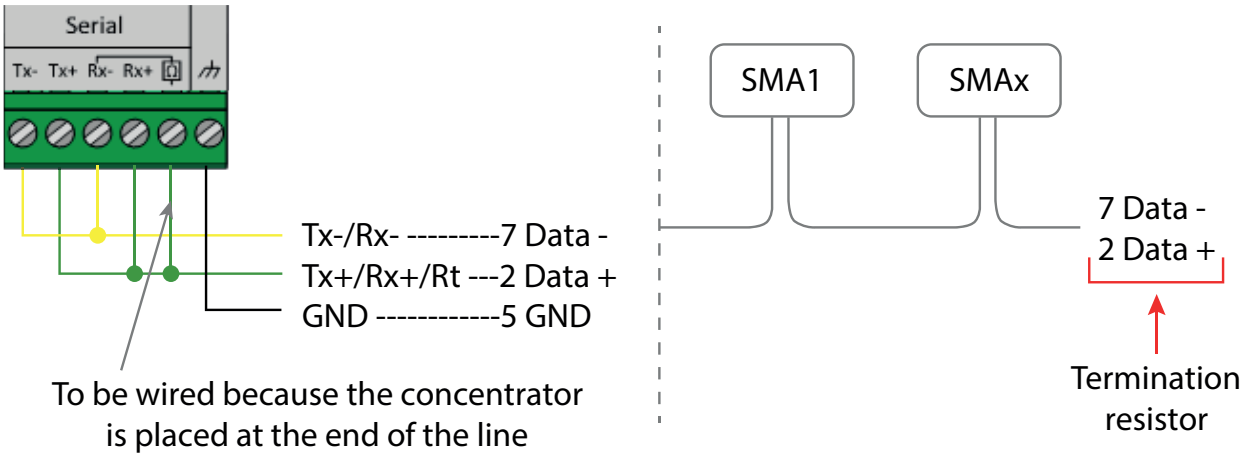

Below are the explanations on wiring for SMA communication boards:

2.1.1 "485BRD-10" communication board:

Wiring:

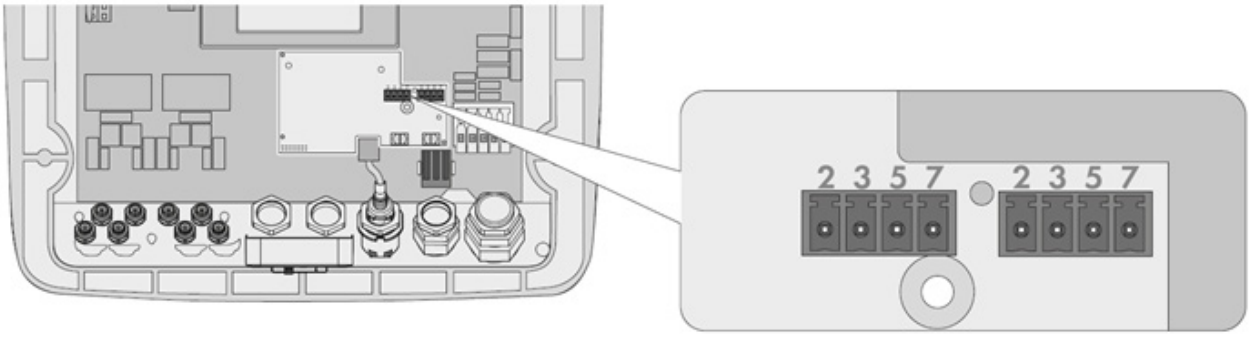

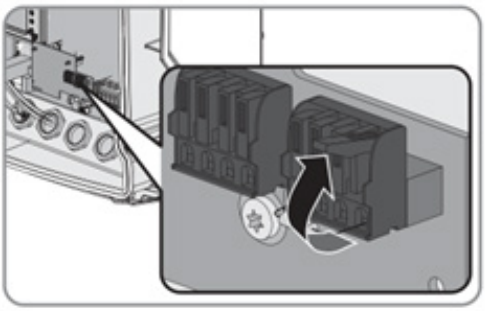

	Signal	Data modules 485
	GND	5
	Data+	2
	Data-	7

Termination resistor:

A 120Ω termination resistor must be fitted between terminal 2 and terminal 7 of the inverter's end-of-line spring connector.

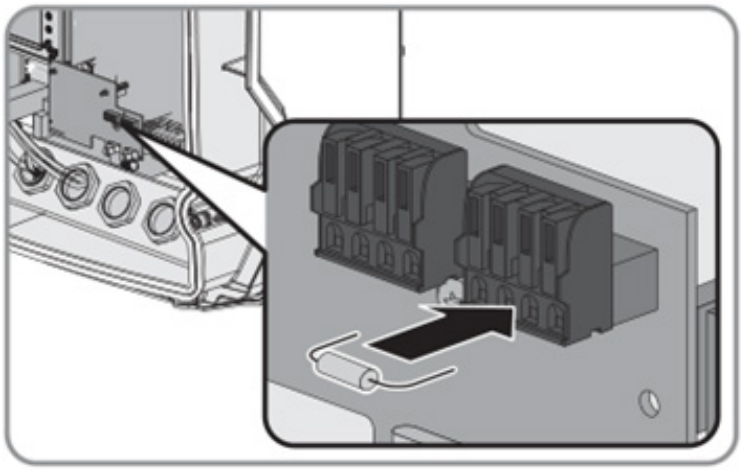

2.1.2 "DM-485CB-10" or "485i-Module" communication board:

Wiring:

	Signal	Data modules 485
	GND	5
	Data+	2
	Data-	7

Termination resistor:

A 120Ω termination resistor must be fitted between terminal 2 and terminal 7 of the inverter's end-of-line terminal block.

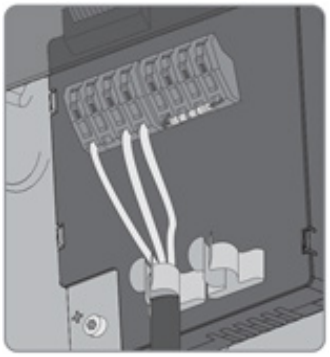

2.1.3 "MD.485-40" communication board:

Wiring:

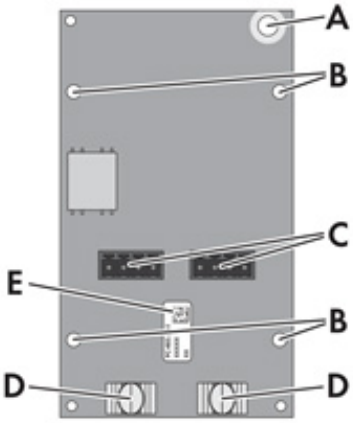

Terminal board	Clamping point	Assignment
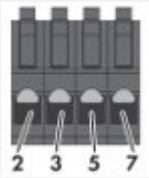	2	Data+ (D+)
	3	Unaffected
	5	Ground (GND)
	7	Data- (D-)

Termination resistor:

A 120Ω termination resistor must be fitted between tightening point 2 and 7 of the inverter's end-of-line connector.

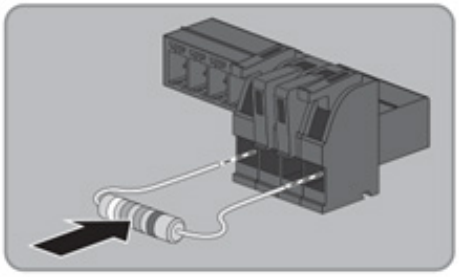

2.1.4 “Retrofit 485PB-SMC-NR” communication board:

Wiring:

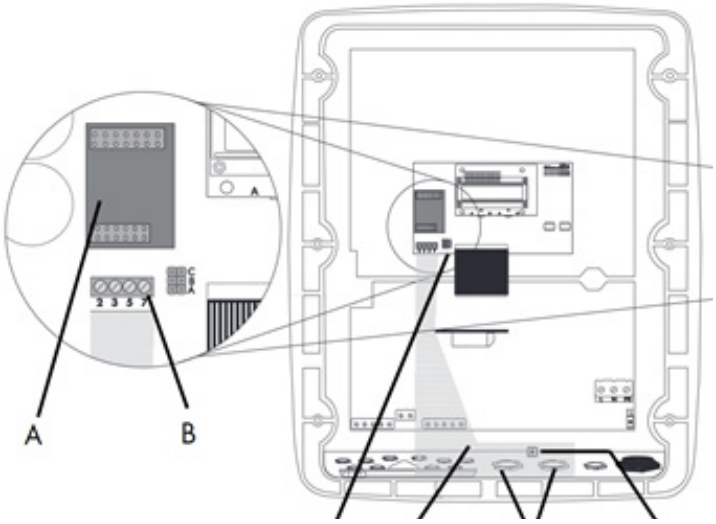

	Signal	Data modules 485
	GND	5
	Data+	2
	Data-	7

Termination resistor:

A termination resistor of 120Ω must be activated by placing the jumper on port A of the inverter placed at the end of the line.

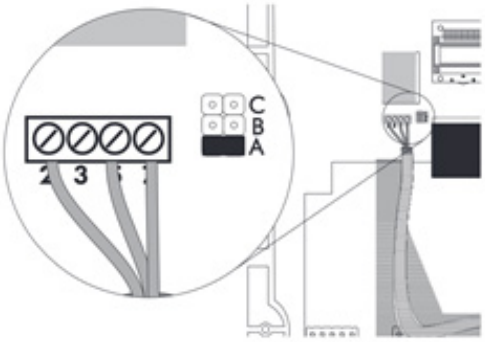

3. Connecting the gateway to inverters using SMA Modbus TCP and SunSpec Modbus TCP via Ethernet

The connection of inverters to SMA Modbus TCP and SunSpec Modbus TCP uses one of the two WebdynSunPM Ethernet interfaces (LAN1 or LAN2).

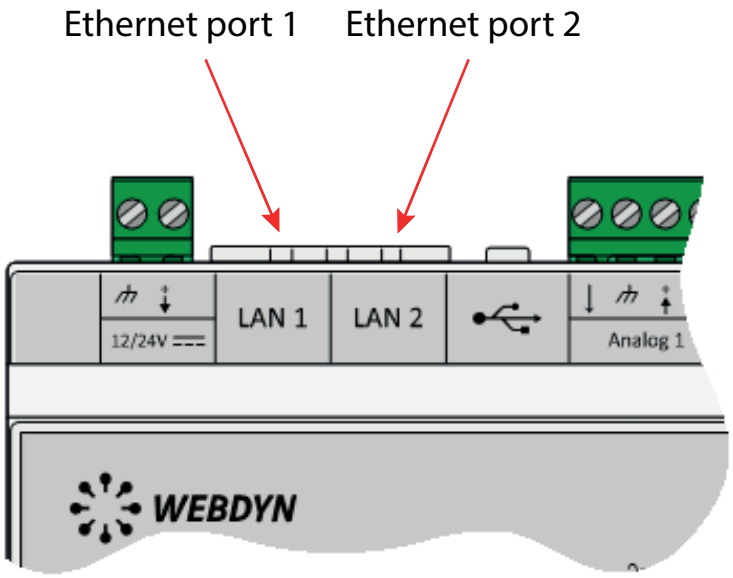

For more details, please refer to the WebdynSunPM user manual.

Star topology wiring:

The inverters must have Speedwire interfaces each having 2 network sockets.

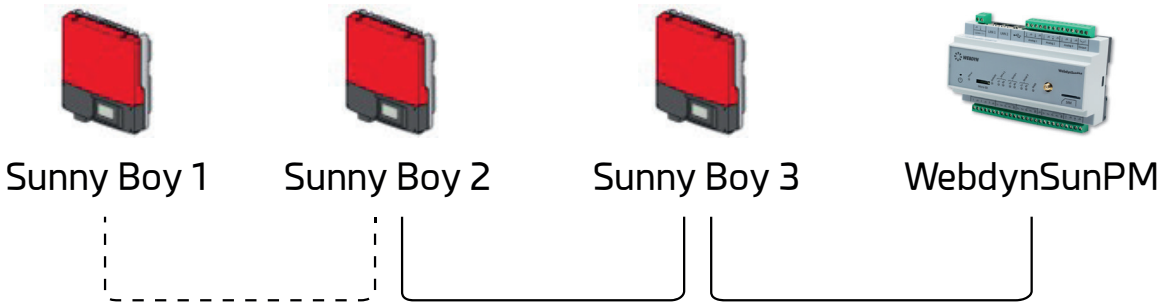

Star topology wiring:

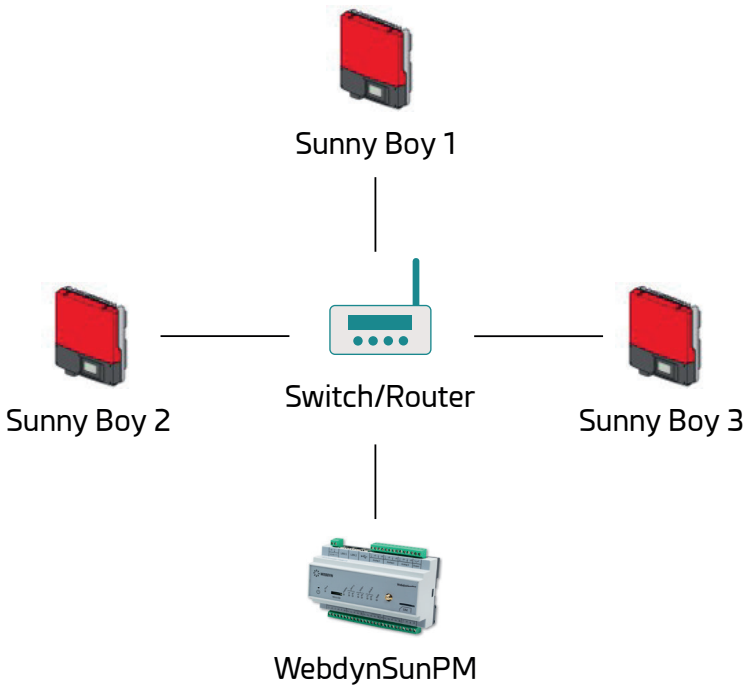

The maximum cable length between two network participants is also referred to as the "end-to-end connection". The maximum end-to-end connection length depends on the cable type. If rigid cable is used (installation cables), the maximum length is 100 metres.

4. Serial port configuration

No configuration is required for the serial port on SMA inverters as it is fixed. The WebdynSunPM discovery for SMA-net by the WebdynSunPM will automatically provide the identifiers to each connected inverter.

The serial port can be configured using the WebdynSunPM web interface using the "Settings" tab.

The “serial” part is used to configure 3 RS485/422 serial ports each which each have their own settings and output.

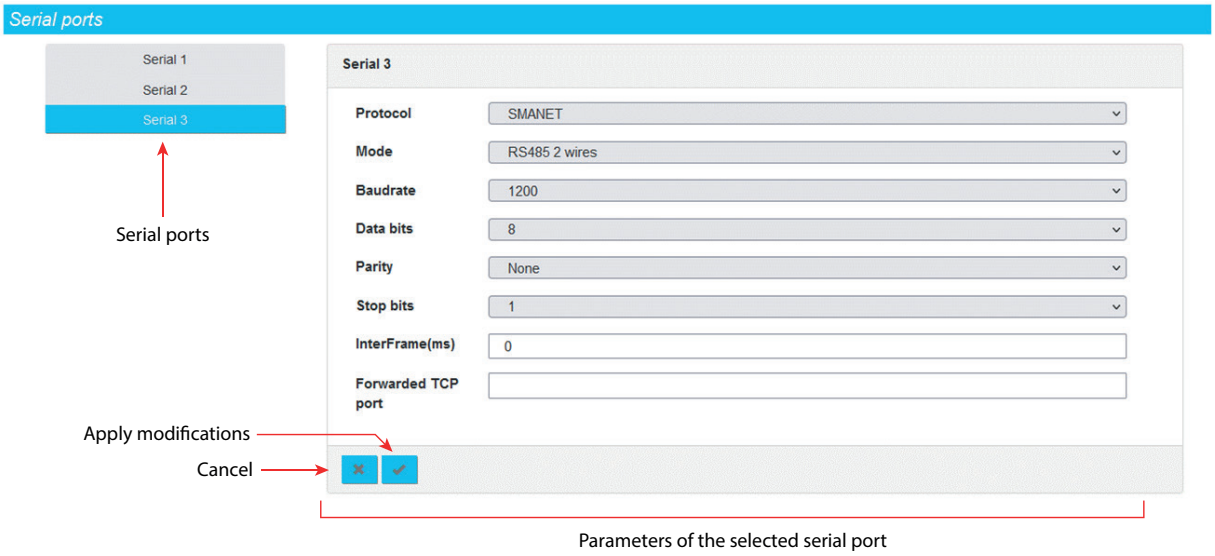

The possible settings for SMA inverters in SMA-net mode for each serial port are:

Web interface	<uid>_daq.csv parameter	Description
Protocol	protocol	Serial interface protocol type: SMANET: serial port configured for SMA-Net
Mode	wires	Serial interface mode: RS485 2 wires: Half-Duplex (2 wires) RS485 serial connection
Baudrate	baudrate	Serial connection speed in bauds: 1200
Data bits	data_bits	Number of data bits: 8
Parity	parity	Serial connection parity: none no parity
Stop bits	stop_bits	Number of stop bits: 1
InterFrame	interframe	The waiting time between 2 frames exchanged on the serial port. This time is expressed in ms. See the explanation in the WebdynSunPM user manual. 0: (recommended value)
Forwarded TCP port	forwarded_port	Forwarded TCP port. If there is a value in this field, the concentrator opens a modbusTCP port on the entered port number. When modbusTCP devices connect to this port, all sent requests are directly forwarded to the modbusRTU bus and the response is returned to the connected device using this modbusTCP port. This option is used to create a communication tunnel between modbusTCP devices and the local modbusRTU network. The requests are slotted between the concentrator's internal monitoring requests. Leave the field blank. (recommended value).

This configuration can be accessed remotely in file "<uid>_daq.csv" stored in the CONFIG directory on the remote server. (see WebdynSunPM user manual).

5. Ethernet port configuration

An IP address must be assigned to each inverter, the address must be unique and on the same subnet as the WebdynSunPM. (refer to the SMA manufacturer manual).

The Ethernet port can be configured using the WebdynSunPM web interface using the "Network" tab.

The “Network” part is used to configure 2 Ethernet interfaces (LAN1 and LAN2) each of which each have their own configuration and output.

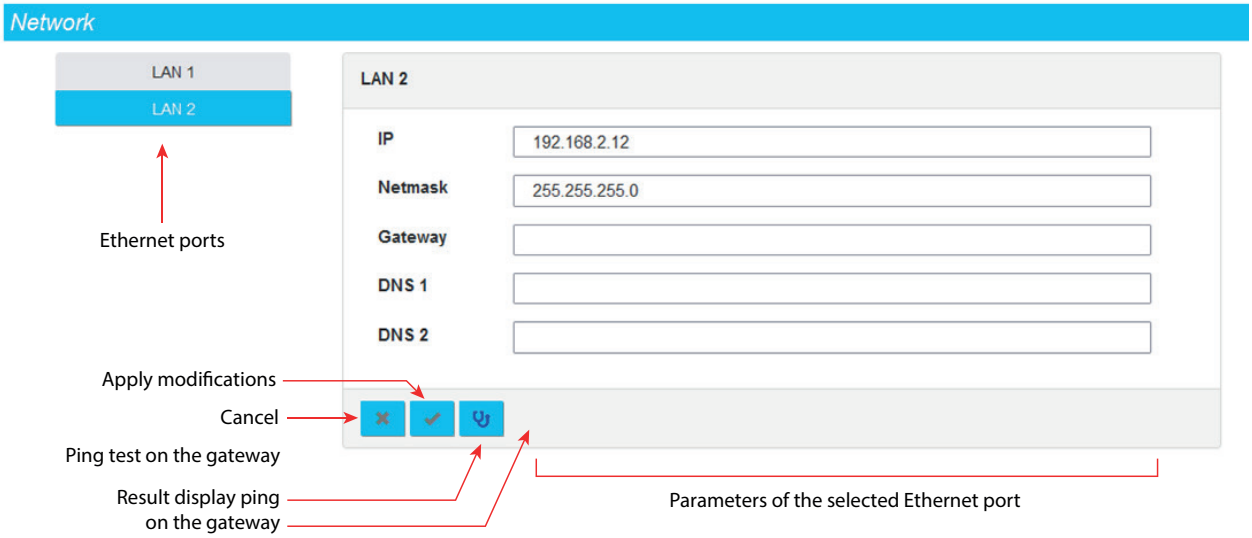

The WebdynSunPM default Ethernet port configuration is as follows:

Parameters	LAN1	LAN2
IP address	192.168.1.12	192.168.2.12
Subnet mask	255.255.255.0	255.255.255.0

If you want to connect several IP devices to the same network, the devices must have different IP addresses but be on the same subnet. Never use the same IP address twice.

The 2 Ethernet interface parameters are:

Web interface	<uid>_daq.csv parameter	Description
IP	ip	IP address at which the concentrator is accessible using the Ethernet network.
Netmask	mask	Your Ethernet network subnet mask. This mask limits the Ethernet network to defined IP addresses and separates the network ranges from each other.
Gateway	gateway	Your Ethernet network gateway address. The gateway address is the IP address for the device that connects to the internet. The address entered here is usually your ADSL/fibre router address.
DNS 1	dns1	DNS 1 server. DNS (Domain Name System) servers translate explicit internet addresses (for example, www.webdyn.com) into their corresponding IP addresses. Enter the DNS server addresses you received from your internet service provider (ISP) here. You can also enter your router IP address. You can also use the google DNS: “8.8.8.8”
DNS 2	dns2	DNS 2 server. If the DNS1 server fails.
IP	ip	IP address at which the concentrator is accessible using the Ethernet network.
Netmask	mask	Your Ethernet network subnet mask. This mask limits the Ethernet network to defined IP addresses and separates the network ranges from each other.
Gateway	gateway	Your Ethernet network gateway address. The gateway address is the IP address for the device that connects to the internet. The address entered here is usually your ADSL/fibre router address.

This configuration can be accessed remotely in file "<uid>_daq.csv" stored in the CONFIG directory on the remote server. (see WebdynSunPM user manual)

If your local network is managed by a network administrator, contact them before including the WebdynSunPM gateway in your network.

6. Automatic device detection

The concentrator can detect SMA inverters automatically depending on the protocol used on in the model (see list below):

- SMA-net: Devices supporting the SMA-net protocol
- SunSpec Modbus TCP: Devices supporting the SunSpec protocol

The WebdynSunPM does not support automatic detection for the "SMA Modbus TCP" protocol, it is only available using manual configuration.

7. SMA-NET device detection

The automatic detection of SMA-Net devices requires the following steps:

- Connect the device to the concentrator using a serial connection configured as explained below.
- Configure the serial connection on the configuration page indicating the required communication speed and the protocol type. Indicate "SMANET":

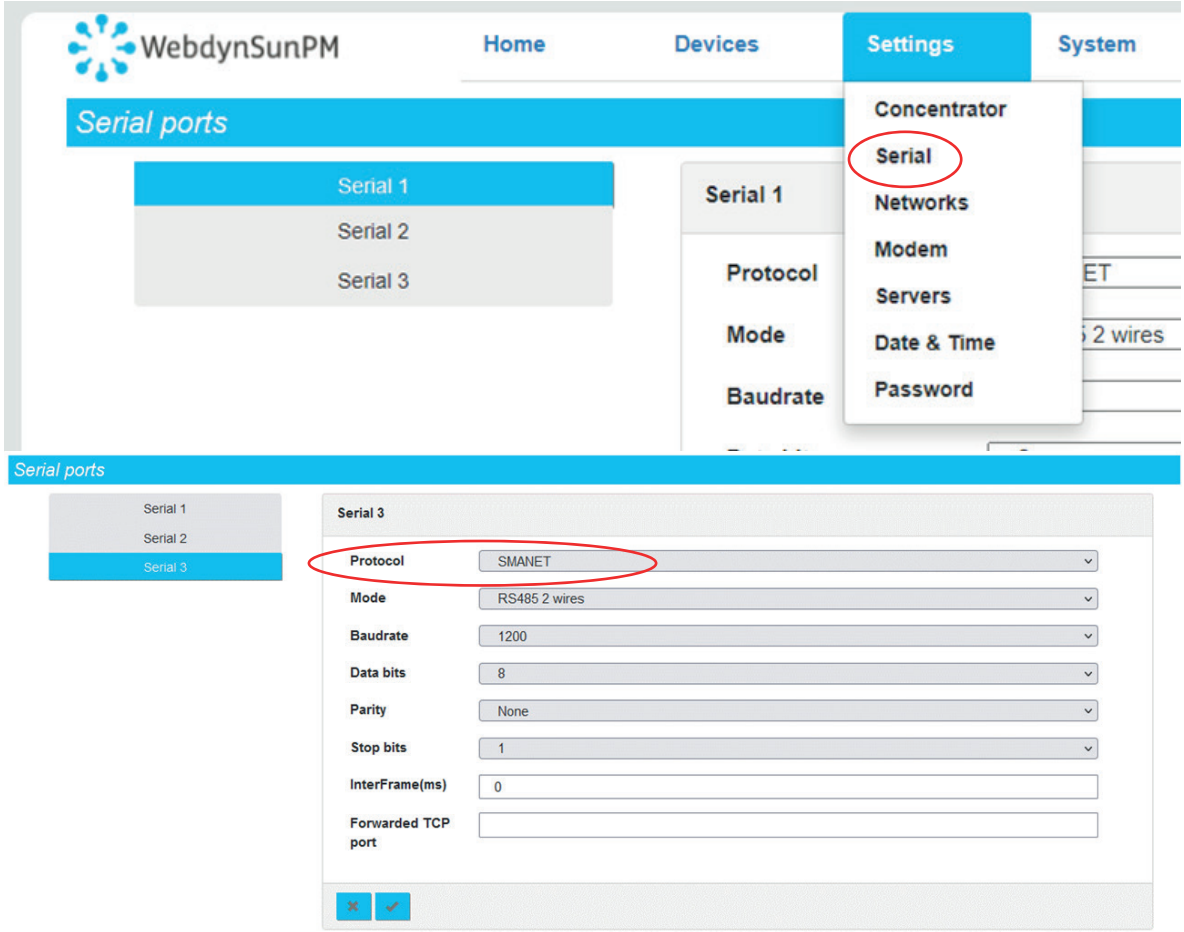

- Go to the device page and click the “Device detect” button:

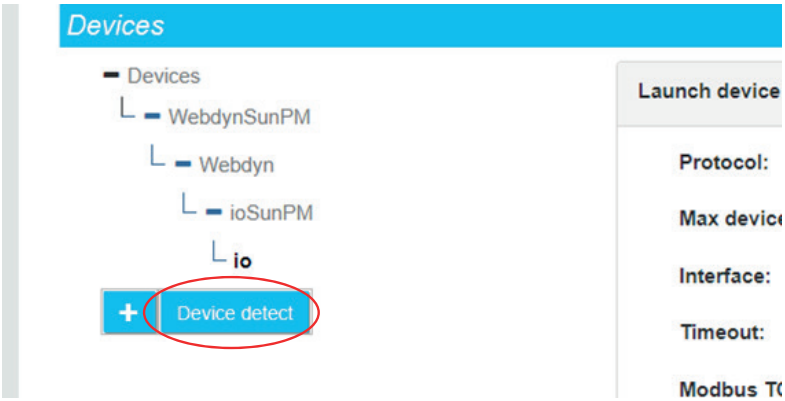

- The detection page is displayed:

  - Select the SMANET protocol from the drop-down list on the first “Protocol” field.
  - Enter the number of devices to detect in the “Number of devices” field. The default value is “100”.
  - Select the configured serial port in the “Interface” field. For the serial connection to be selectable, it must first be configured by going to the "Settings" tab, then "Serial" and selecting the "SMANET" protocol.
  - The timeout indicates the SMA-Net device response time. By default it is set to 10000 ms.

- Next click the “Start detection” button to launch the detection. The progress window below is displayed:

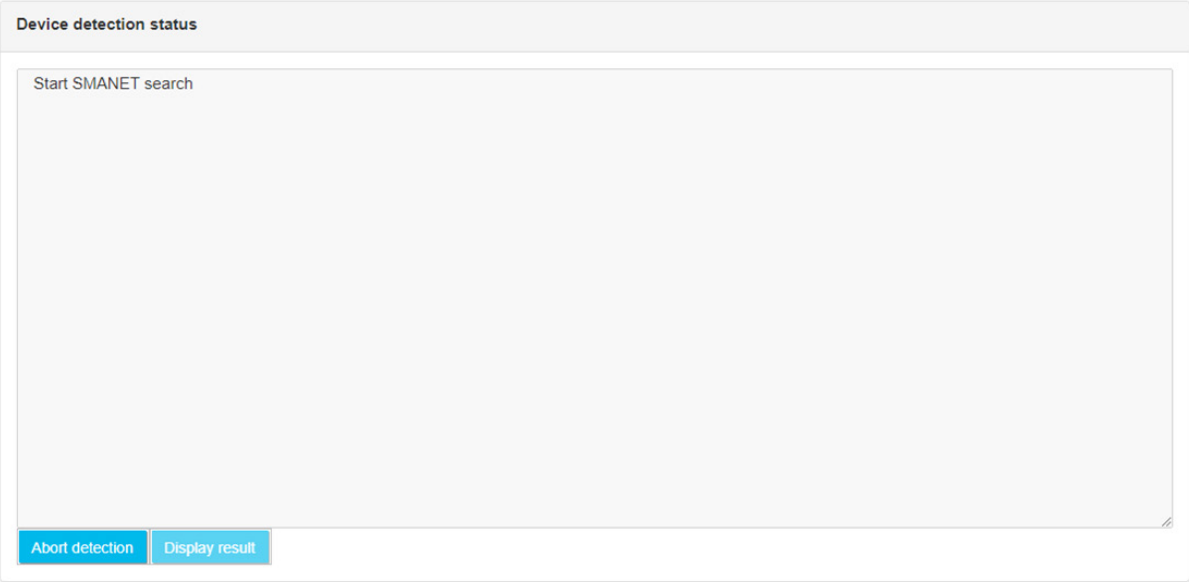

The detection progress is displayed on the web page:

  - “Start SMANET search” means the SMA-net scan has begun.

- As the detection progresses, the screen displays the detected devices with their index, serial number, model and address on the bus:

```
Device idx: 0, serial: 2000388220, model: WR21TL09, Address: 0xcc00 detected
```

- On completion of the detection, the page displays the number of detected devices:

```
found 1 devices
Search SMANET finished
```

- It is always possible to interrupt detection by clicking the “Abort detection” button. However, this is not recommended, as SMA inverters can be disrupted if the detection is stopped during discovery:

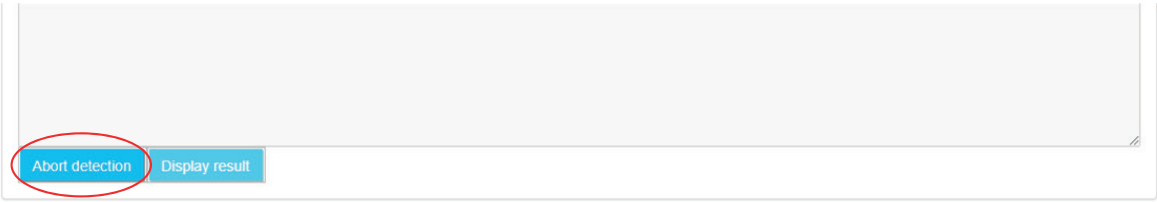

- On completion of detection, the last detection page is used to view all detected inverters and, eventually, add them to the configuration.

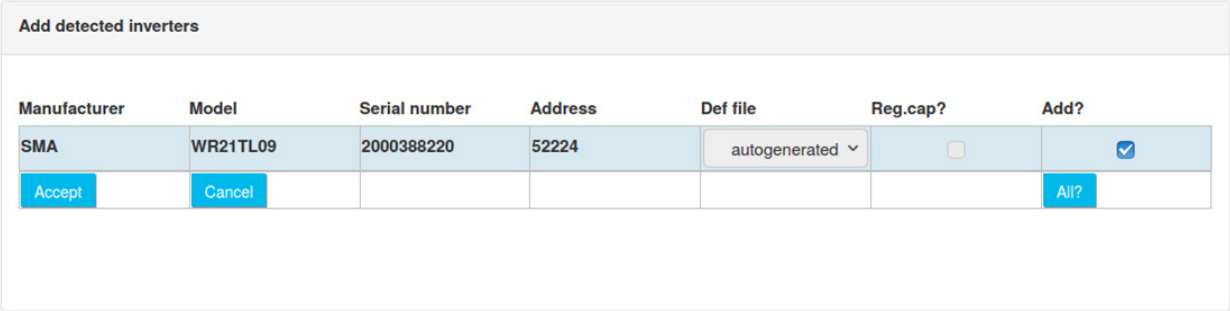

This screen therefore displays all the detected devices, as well as a certain number of data read from the SMA-Net device tables (model, serial number, address, manufacturer)

There is also a checkbox at the right to select the devices to add to the configuration. Note that if the detected device is already part of the configuration, the checkbox is not checked by default. Otherwise the checkbox is checked for automatic addition.

Once the devices have been selected, clicking the “Accept” button imports the new configuration to the concentrator and the device appears in the configured devices.

- When users click the “Accept” button, the device import starts by reading the different frames to completely create the devices. Import progress is displayed in the import window:

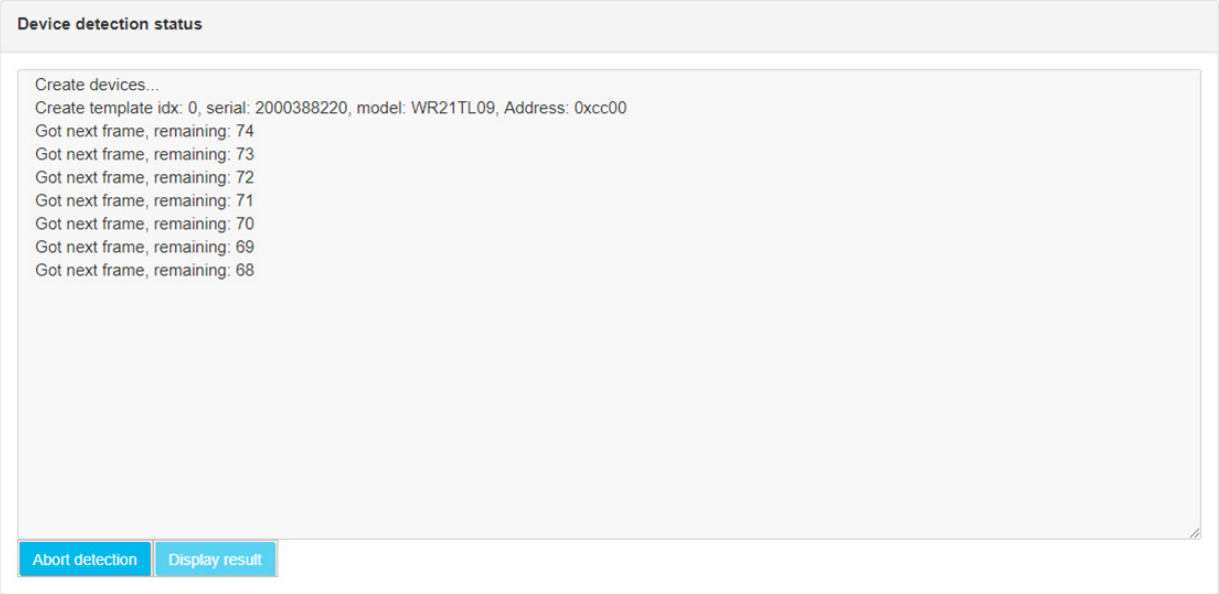

Note that if the device already existed in the configuration and the user forces a new import, the previous device is not overwritten. A new device is created in addition to the pre-existing device.

Automatic detection can be used to create the definition files needed to operate the inverters. These files are stored and accessible in the DEF directory on the remote server. (see WebdynSunPM user manual)

8. SMA-NET definition file

The SMA-net protocol file names are composed as follows:

<uid>_SMA_Inverter_SMA_<Model>.csv

Where:

- <uid>: Concentrator identifier
- < Model>: is generated automatically from the SMA-net protocol “Model” information

Definition file content:

Field	Description
Info1	Canal: The channel number for the variable to be collected. This information is specific to the inverter and should not be modified.
Info2	Type Variable: variable type to be collected (analogue, digital, ...). This information is specific to the inverter and should not be modified.
Info3	Variable Modbus format. The authorised formats are the following: • U8: 8-bit unsigned integer (1 byte) • U16: 16-bit unsigned integer (2 bytes, or 1 register) • U32: 32-bit unsigned integer (4 bytes, or 2 registers) • U64: 64-bit unsigned integer (8 bytes, or 4 registers) • I8: 8-bit signed integer (1 byte) • I16: 16-bit signed integer (2 bytes, or 1 register) • I32: 32-bit signed integer (4 bytes, or 2 registers) • I64: 64-bit signed integer (8 bytes, or 4 registers) • F32: 32-bit floating (4 bytes, or 2 registers) • F64: 64-bit floating (8 bytes, or 4 registers) • String: the variable is a character string. In that case the “Address_Size” notation should be used for the “Info2” field
Info4	Not used

Example of a definition file for an SMA inverter in SMA-net mode:

```
SMANET;Inverter;SMA;WR21TL09
1;1;0401;U32;;SMA-SN          ;;0.000000;4294899968.000000;        ;1
2;2;0401;F32;;Upv-Start       ;;125.000000;600.000000;V      ;1
3;3;0401;F32;;T-Start         ;;5.000000;300.000000;s      ;1
4;4;0401;F32;;T-Stop          ;;1.000000;300.000000;s      ;1
5;5;0401;F32;;dU U-Konst      ;;0.500000;20.000000;V/s    ;1
6;6;0401;F32;;dU-Mpp Track    ;;0.550000;10.000000;V/TaMpp;1
7;7;0401;F32;;dUref- Mpp      ;;5.000000;380.000000;V      ;1
8;8;0401;F32;;I Such neu      ;;0.000000;9000.000000;mA     ;1
9;9;0401;F32;;Usoll-Konst     ;;125.000000;600.000000;V      ;1
10;10;0401;F32;;Isoll-Konst     ;;0.000000;100.000000;%      ;1
11;11;0401;F32;;KP_Ureg         ;;0.000000;20.000000;       ;1
12;12;0401;F32;;Ti-Ureg         ;;0.000000;10.000000;s      ;1
13;13;0401;F32;;Td-Ureg         ;;0.000000;1.000000;s      ;1
14;14;0401;F32;;Pmax            ;;0.000000;2500.000000;W      ;1
15;15;0401;F32;;Plimit          ;;2150.000000;2150.000000;W      ;1
16;16;0401;F32;;NiTest          ;;0.000000;1.000000;       ;1
17;17;0401;F32;;Kom.-Ni         ;;0.000000;250.000000;       ;1
18;18;0401;F32;;Cnt-Imax        ;;1.000000;1000.000000;       ;1
19;19;0401;F32;;Upv-Max         ;;100.000000;600.000000;V      ;1
20;20;0401;F32;;Uac-Min         ;;180.000000;300.000000;V      ;1
21;21;0401;F32;;Uac-Max         ;;180.000000;300.000000;V      ;1
```

```
22;22;0401;F32;;Fac-delta-     ;;0.000000;4.500000;Hz     ;1
23;23;0401;F32;;Fac-delta+     ;;0.000000;4.500000;Hz     ;1
24;24;0401;F32;;dFac-Max       ;;0.005000;4.000000;Hz/s   ;1
25;25;0401;F32;;dZac-Max       ;;0.000000;2000.000000;mOhm   ;1
26;26;0401;F32;;Riso-Min       ;;0.000000;10000.000000;kOhm   ;1
27;27;0401;F32;;Tkk-Max        ;;0.000000;120.000000;grdC   ;1
28;28;0401;F32;;Upv-Fakt       ;;0.025000;25.000000;       ;1
29;29;0401;F32;;Iso-Fakt       ;;0.003000;0.010000;       ;1
30;30;0401;F32;;It-Fakt        ;;0.000000;150.000000;       ;1
31;31;0401;F32;;Iac-Fakt       ;;0.100000;100.000000;       ;1
32;32;0401;F32;;Hardware-BFS   ;;0.000000;100.000000;Version;1
33;33;0401;F32;;Software-BFR   ;;0.000000;100.000000;Version;1
34;34;0401;F32;;Software-SRR   ;;0.000000;100.000000;Version;1
35;35;0401;F32;;Uac-BFR-Fakt   ;;0.298300;0.329700;       ;1
36;36;0401;F32;;Uac-SRR-Fakt   ;;1.159000;1.281000;       ;1
37;37;0401;F32;;AD0-3KorrFakt  ;;29492.000000;36044.000000;       ;1
38;38;0401;F32;;AD0-3KorrOffs  ;;9000.000000;11000.000000;       ;1
39;39;0401;F32;;AD4-7KorrFakt  ;;29492.000000;36044.000000;       ;1
40;40;0401;F32;;AD4-7KorrOffs  ;;9000.000000;11000.000000;       ;1
41;41;0401;U32;;Inst.-Code     ;;0.000000;4294899968.000000;       ;1
42;42;0401;F32;;E_Total        ;;0.000000;200000.000000;kWh    ;1
43;43;0401;F32;;h_Total        ;;0.000000;200000.000000;h      ;1
44;1;0408;U8;;Betriebsart    ;;0.000000;0.000000;;1
45;2;0408;U8;;Speicherfunkt. ;;0.000000;0.000000;;1
46;3;0408;U8;;SMA -Funktion  ;;0.000000;0.000000;;1
47;4;0408;U8;;Default        ;;0.000000;0.000000;;1
48;5;0408;U8;;Storage        ;;0.000000;0.000000;;1
49;1;0901;U16;;Upv-Ist        ;;1.000000;0.000000;V      ;2
50;2;0901;U16;;Upv-Soll       ;;1.000000;0.000000;V      ;2
51;3;0901;U16;;Iac-Ist        ;;1.000000;0.000000;mA     ;2
52;4;0901;U16;;Iac-Soll       ;;1.000000;0.000000;%      ;2
53;5;0901;U16;;Uac            ;;1.000000;0.000000;V      ;2
54;6;0901;U16;;Fac            ;;0.010000;0.000000;Hz     ;2
55;7;0901;U16;;Pac            ;;1.000000;0.000000;W      ;2
56;8;0901;U16;;Zac            ;;0.001000;0.000000;Ohm    ;2
57;9;0901;U16;;dZac           ;;0.001000;-5.000000;Ohm    ;2
58;10;0901;U16;;RErd-Start     ;;1.000000;0.000000;kOhm   ;2
59;11;0901;U16;;Uac-Srr        ;;1.000000;0.000000;V      ;2
60;12;0901;U16;;Fac-Srr        ;;0.010000;0.000000;Hz     ;2
61;13;0901;U16;;Zac-Srr        ;;0.001000;0.000000;Ohm    ;2
62;14;0901;U16;;Izac           ;;0.001000;0.000000;A      ;2
```

```
63;15;0901;U16;;Tkk            ;;0.100000;0.000000;grdC   ;2
64;16;0901;U16;;Ipv            ;;1.000000;0.000000;mA     ;2
65;17;0901;U16;;Tkk max        ;;0.100000;0.000000;grdC   ;2
66;18;0901;U16;;Upv max        ;;1.000000;0.000000;V      ;2
67;19;0901;U16;;Uzwk           ;;1.000000;0.000000;V      ;2
68;20;0901;U16;;dI             ;;1.000000;0.000000;mA     ;2
69;21;0901;U16;;dI-Srr         ;;1.000000;0.000000;mA     ;2
70;1;0904;U32;;E-Total        ;;0.001000;0.000000;kWh    ;4
71;2;0904;U32;;h-Total        ;;0.000278;0.000000;h      ;4
72;3;0904;U32;;h-On           ;;0.000278;0.000000;h      ;4
73;4;0904;U32;;Netz-Ein       ;;1.000000;0.000000;       ;4
74;5;0904;U32;;Event-Cnt      ;;1.000000;0.000000;       ;4
75;6;0904;U32;;Seriennummer   ;;1.000000;0.000000;       ;4

76;1;0908;U8;;Status         ;;0.000000;0.000000;0:Offset|1:Stop|2:Netzueb
.|3:Warten|4:U-Konst|5:I-Konst|6:Mpp-Such|7:Mpp|8:Stoer.|9:Fehler|10:Mpp
Peak|11:Derating|12:Zuschalt.|13:Uac / Rel|14:Stop 1|15:Calib;8

77;2;0908;U8;;Fehler         ;;0.000000;0.000000;0:-------|1:NUW-UAC|2:NUW-
FAC|3:NUW-ZAC|4:K1-Trenn|5:K2-Trenn|6:EEPROM dBh|7:ROM|8:NUW-dI|9:B1|10:B2|11:B3|
12:B4|13:EeRestore|14:B6|15:B7|16:B8|17:Iac-DC_Offs-Bfr|18:OFFSET|19:EEPROM|20:Bfr-
Srr|21:K1-Schliess|22:Watchdog|23:Uzwk|24:UpvMax|25:Riso|26:dI-Mess|27:dI|28:Uac-
Bfr|29:Fac-Bfr|30:Zac-Bfr|31:dZac-Bfr|32:S1|33:S2|34:S3|35:S4|36:S5|37:S6|38:S7|39
:S8|40:S9|41:S10|42:S11|43:S12|44:S13|45:S14|46:S15|47:S16|48:S17|49:S18|50:S19|51
:S20|52:S21|53:S22|54:S23|55:Iac-DC_Offs-Srr|56:Imax|57:Shut-Down|58:dI-Srr|59:Uac-
Srr|60:Fac-Srr|61:Zac-Srr|62:dZac-Srr|63:NUW-Timeout;8
```

9. SunSpec Modbus TCP device detection

The automatic detection of SunSpec Modbus TCP devices requires the following steps:

- Connect the equipment to the concentrator using an Ethernet connection configured on the same sub-network (see the SunSpec Modbus TCP connection part below)
- Go to the device page and click the “Device detect” button:

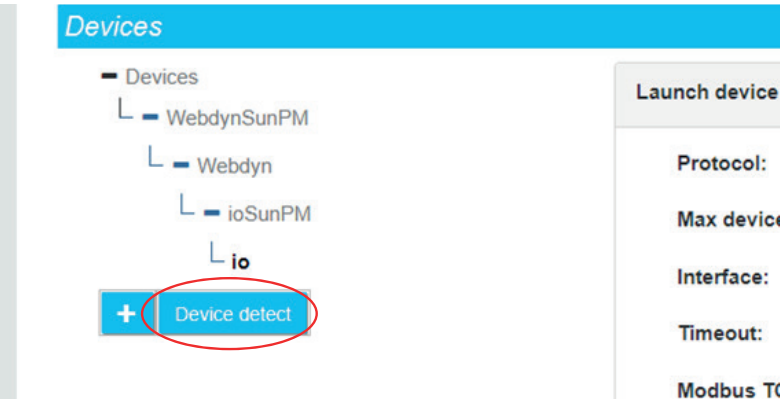

- The detection page is displayed:

  - Select the SunSpec protocol from the drop-down list on the first “Protocol” field.
  - Enter the number of devices to detect in “Number of devices” field. This can speed up the total detection time. By leaving the default value (1), all the devices will be polled and all detectable devices will be detected.
  - Select the configured Ethernet port in the “Interface” field
  - The timeout indicates the Sunspec device response time. By default it is set to 2000 ms.
  - Enter the port to be used in the "The Modbus TCP port" field. By default, it is set to 502.
- Next click the “Start detection” button to launch the detection. The progress window below is displayed:

- The detection progress is displayed on the web page:
  - "SunSpec detection start on Ethernet" means that the SunSpec scan has started.

- “NON SUNSPEC device found” means that a non SunSpec modbus device was detected at the indicated modbus address:

```
2021-12-24 09:56:10:NON SUNSPEC device found at @1 192.168.2.21:502
```

Means that a modbus device that does not meet SunSpec specifications was found at modbus address 1.

- “SunSpec device found” means that a modbus device meeting SunSpec specifications was detected at the indicated modbus address:

```
2021-12-24 09:56:21: SunSpec device found at @126 192.168.2.23:502
```

Means that a modbus device that meets SunSpec specifications was found at modbus address “126”.

- “Found table” means that a SunSpec table was detected on the device. The information line then indicates the table identifier, its size claimed by the device as well as technical information on the device and the modbus start register for the table:

```
2021-12-24 09:56:21:Found table 1:66 at 40002@126 192.168.2.23:502
```

Means that table identifier “1” of size “66” registers was detected on the modbus device in register “40002” and modbus address “126” at IP address “192.168.2.53” and on port “502”

- The screen shows the detected devices with their Modbus tables and their address on the bus:

```
SunSpec device found at @126 192.168.2.23:502
Found table 1:66 at 40002@126 192.168.2.23:502
Found table 11:13 at 40070@126 192.168.2.23:502
Found table 12:98 at 40085@126 192.168.2.23:502
Found table 101:50 at 40185@126 192.168.2.23:502
Found table 120:26 at 40237@126 192.168.2.23:502
Found table 121:30 at 40265@126 192.168.2.23:502
Found table 122:44 at 40297@126 192.168.2.23:502
Found table 123:24 at 40343@126 192.168.2.23:502
Found table 124:24 at 40369@126 192.168.2.23:502
Found table 126:64 at 40395@126 192.168.2.23:502
Found table 127:10 at 40461@126 192.168.2.23:502
Found table 128:14 at 40473@126 192.168.2.23:502
Found table 131:64 at 40489@126 192.168.2.23:502
Found table 132:64 at 40555@126 192.168.2.23:502
Found table 160:128 at 40621@126 192.168.2.23:502
Found table 129:60 at 40751@126 192.168.2.23:502
Found table 130:60 at 40813@126 192.168.2.23:502
```

- “End of SunSpec detection” means that SunSpec detection is complete. The line indicates the number of detected devices:

```
2021-12-24 09:56:53: End of SunSpec detection on ethernet1. 1 devices found.
```

SunSpec detection successfully completed on Ethernet interface 1. One device was therefore detected.

- It is always possible to interrupt detection by clicking the “Abort detection” button. However, this is not recommended, as SMA inverters can be disrupted if the detection is stopped during discovery:

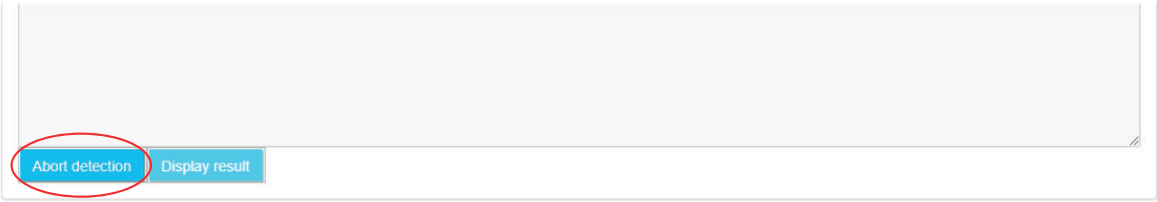

- On completion of the SunSpec detection, the last detection page is used to view all detected devices and, eventually, add them to the configuration.

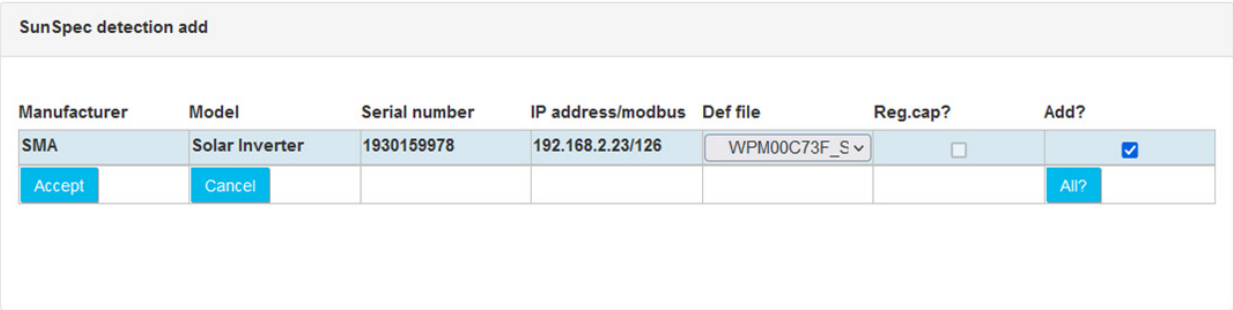

This screen therefore displays all the detected devices, as well as a certain number of data read from the SunSpec tables (model, serial number, address, manufacturer) as well as their associated definition file name.

There is also a checkbox at the right to select the devices to add to the configuration. Note that if the detected device is already part of the configuration, the checkbox is not checked by default. Otherwise the checkbox is checked for automatic addition.

Once the devices have been selected, clicking the “Accept” button imports the new configuration to the concentrator and the device appears in the configured devices.

- When users click the “Accept” button, the device import starts by reading the different frames to completely create the devices. Note that if the device already existed in the configuration and the user forces a new import, the previous device is not overwritten. A new device is created in addition to the pre-existing device.

Automatic detection can be used to create the definition files needed to operate the inverters. These files are stored and accessible in the DEF directory on the remote server. (see WebdynSunPM user manual).

10. SunSpec Modbus TCP definition file

The SunSpec Modbus TCP protocol file names are composed as follows:

<uid>_SunSpec_inverter_<Manufacturer>_<Model>_modbusTCP.csv

Where:

- <uid>: Concentrator identifier
- <Manufacturer>: is generated automatically from the Sunspec protocol “Manufacturer” information
- < Model>: is generated automatically from the Sunspec protocol “Model” information

Definition file content:

Field	Description
Info1	Canal: The channel number for the variable to be collected. This information is specific to the inverter and should not be modified.
Info2	Type Variable: variable type to be collected (analogue, digital, ...). This information is specific to the inverter and should not be modified.

Field	Description
Info3	Modbus Variable format. The authorised formats are the following: • U8: 8-bit unsigned integer (1 byte) • U16: 16-bit unsigned integer (2 bytes, or 1 register) • U32: 32-bit unsigned integer (4 bytes, or 2 registers) • U64: 64-bit unsigned integer (8 bytes, or 4 registers) • I8: 8-bit signed integer (1 byte) • I16: 16-bit signed integer (2 bytes, or 1 register) • I32: 32-bit signed integer (4 bytes, or 2 registers) • I64: 64-bit signed integer (8 bytes, or 4 registers) • F32: 32-bit floating (4 bytes, or 2 registers) • F64: 64-bit floating (8 bytes, or 4 registers) • String: the variable is a character string. The "Address_Size" notation must then be used for the "Info2" field • Bits: the variable is of the bit field type. The "Address_1st bit_Number of bits" notation must then be used for the "Info2" field • IP: the variable is of the IP address V4 type and is therefore coded on 4 bytes (2 registers) • IPV6: the variable is of the IP address V6 type and is therefore coded on 16 bytes (8 registers) • MAC: the variable is of the MAC address type in "EUI48" format. It is therefore coded on 6 bytes (3 registers) Note that the integer types can be modified by adding a suffix. The authorised modifiers are: • _W: words are exchanged, i.e. the contents of the variable's registers are exchanged in blocks of 2 bytes • _B: bytes are exchanged, i.e. the contents of the variable's registers are exchanged at byte level, one by one • _WB: words AND bytes are exchanged. The 2 previous modifiers are applied. Thus, for example, the “I32_W” notation indicates that it is a variable of which bytes 1 and 2 will be exchanged with bytes 3 and 4. Similarly, the “U16_B” notation indicates that bytes 1 and 2 of the variable are exchanged. This is a “Little endian/Big endian” conversion.
Info4	Not used

Example of a definition file for an SMA inverter in SunSpec Modbus TCP mode:

```
modbusTCP;inverter;SMA;Solar_Inverter
1;3;40002;I16;;1_tableId;;1.000000;0.000000;;1
2;3;40003;I16;;1_tableSize;;1.000000;0.000000;;1
3;3;40004_32;STRING;;1_Mn;;1.000000;0.000000;;1
4;3;40020_32;STRING;;1_Md;DisplayModel;1.000000;0.000000;;1
5;3;40036_16;STRING;;1_Opt;;1.000000;0.000000;;1
6;3;40044_16;STRING;;1_Vr;;1.000000;0.000000;;1
7;3;40052_32;STRING;;1_SN;DisplaySerialNumber;1.000000;0.000000;;1
8;3;40068;U16;;1_DA;;1.000000;0.000000;;1
```

```
10;3;40070;I16;;11_tableId;;1.000000;0.000000;;1
11;3;40071;I16;;11_tableSize;;1.000000;0.000000;;1
12;3;40072;U16;;11_Spd;;1.000000;0.000000;Mbps;1
13;3;40073;U16;;11_CfgSt;;1.000000;0.000000;;1
14;3;40074;U16;;11_St;;1.000000;0.000000;;1
15;3;40075;MAC;;11_MAC;;1.000000;0.000000;;1
16;3;40079_8;STRING;;11_Nam;;1.000000;0.000000;;1
17;3;40083;U16;;11_Ctl;;1.000000;0.000000;;1
18;3;40084;U16;;11_FrcSpd;;1.000000;0.000000;Mbps;1
19;3;40085;I16;;12_tableId;;1.000000;0.000000;;1
20;3;40086;I16;;12_tableSize;;1.000000;0.000000;;1
21;3;40087_8;STRING;;12_Nam;;1.000000;0.000000;;1
22;3;40091;U16;;12_CfgSt;;1.000000;0.000000;;1
23;3;40092;U16;;12_ChgSt;;1.000000;0.000000;;1
24;3;40093;U16;;12_Cap;;1.000000;0.000000;;1
25;3;40094;U16;;12_Cfg;;1.000000;0.000000;;1
26;3;40095;U16;;12_Ctl;;1.000000;0.000000;;1
27;3;40096_16;STRING;;12_Addr;;1.000000;0.000000;;1
28;3;40104_16;STRING;;12_Msk;;1.000000;0.000000;;1
29;3;40112_16;STRING;;12_Gw;;1.000000;0.000000;;1
30;3;40120_16;STRING;;12_DNS1;;1.000000;0.000000;;1
31;3;40128_16;STRING;;12_DNS2;;1.000000;0.000000;;1
32;3;40136_24;STRING;;12_NTP1;;1.000000;0.000000;;1
33;3;40148_24;STRING;;12_NTP2;;1.000000;0.000000;;1
34;3;40160_24;STRING;;12_DomNam;;1.000000;0.000000;;1
35;3;40172_24;STRING;;12_HostNam;;1.000000;0.000000;;1
37;3;40185;I16;;101_tableId;;1.000000;0.000000;;1
38;3;40186;I16;;101_tableSize;;1.000000;0.000000;;1
39;3;40187;U16;101_A_SF;101_A;;1.000000;0.000000;A;4
40;3;40188;U16;101_A_SF;101_AphA;;1.000000;0.000000;A;4
41;3;40189;U16;101_A_SF;101_AphB;;1.000000;0.000000;A;4
42;3;40190;U16;101_A_SF;101_AphC;;1.000000;0.000000;A;4
43;3;40191;I16;;101_A_SF;;1.000000;0.000000;;4
44;3;40192;U16;101_V_SF;101_PPVphAB;;1.000000;0.000000;V;4
45;3;40193;U16;101_V_SF;101_PPVphBC;;1.000000;0.000000;V;4
46;3;40194;U16;101_V_SF;101_PPVphCA;;1.000000;0.000000;V;4
47;3;40195;U16;101_V_SF;101_PhVphA;;1.000000;0.000000;V;4
48;3;40196;U16;101_V_SF;101_PhVphB;;1.000000;0.000000;V;4
49;3;40197;U16;101_V_SF;101_PhVphC;;1.000000;0.000000;V;4
50;3;40198;I16;;101_V_SF;;1.000000;0.000000;;4
51;3;40199;I16;101_W_SF;101_W;;1.000000;0.000000;W;4
```

```
52;3;40200;I16;;101_W_SF;;1.000000;0.000000;;4
53;3;40201;U16;101_Hz_SF;101_Hz;;1.000000;0.000000;Hz;4
54;3;40202;I16;;101_Hz_SF;;1.000000;0.000000;;4
55;3;40203;I16;101_VA_SF;101_VA;;1.000000;0.000000;VA;4
56;3;40204;I16;;101_VA_SF;;1.000000;0.000000;;4
57;3;40205;I16;101_VAr_SF;101_VAr;;1.000000;0.000000;var;4
58;3;40206;I16;;101_VAr_SF;;1.000000;0.000000;;4
59;3;40207;I16;101_PF_SF;101_PF;;1.000000;0.000000;Pct;4
60;3;40208;I16;;101_PF_SF;;1.000000;0.000000;;4
61;3;40209;U32;101_WH_SF;101_WH;;1.000000;0.000000;Wh;4
62;3;40211;I16;;101_WH_SF;;1.000000;0.000000;;4
63;3;40212;U16;101_DCA_SF;101_DCA;;1.000000;0.000000;A;4
64;3;40213;I16;;101_DCA_SF;;1.000000;0.000000;;4
65;3;40214;U16;101_DCV_SF;101_DCV;;1.000000;0.000000;V;4
66;3;40215;I16;;101_DCV_SF;;1.000000;0.000000;;4
67;3;40216;I16;101_DCW_SF;101_DCW;;1.000000;0.000000;W;4
68;3;40217;I16;;101_DCW_SF;;1.000000;0.000000;;4
69;3;40218;I16;101_Tmp_SF;101_TmpCab;;1.000000;0.000000;C;4
70;3;40219;I16;101_Tmp_SF;101_TmpSnk;;1.000000;0.000000;C;4
71;3;40220;I16;101_Tmp_SF;101_TmpTrns;;1.000000;0.000000;C;4
72;3;40221;I16;101_Tmp_SF;101_TmpOt;;1.000000;0.000000;C;4
73;3;40222;I16;;101_Tmp_SF;;1.000000;0.000000;;4
74;3;40223;U16;;101_St;;1.000000;0.000000;;4
75;3;40224;U16;;101_StVnd;;1.000000;0.000000;;4
76;3;40225;U32;;101_Evt1;;1.000000;0.000000;;4
77;3;40227;U32;;101_Evt2;;1.000000;0.000000;;4
78;3;40229;U32;;101_EvtVnd1;;1.000000;0.000000;;4
79;3;40231;U32;;101_EvtVnd2;;1.000000;0.000000;;4
80;3;40233;U32;;101_EvtVnd3;;1.000000;0.000000;;4
81;3;40235;U32;;101_EvtVnd4;;1.000000;0.000000;;4
82;3;40237;I16;;120_tableId;;1.000000;0.000000;;1
83;3;40238;I16;;120_tableSize;;1.000000;0.000000;;1
84;3;40239;U16;;120_DERTyp;;1.000000;0.000000;;1
85;3;40240;U16;120_WRtg_SF;120_WRtg;;1.000000;0.000000;W;1
86;3;40241;I16;;120_WRtg_SF;;1.000000;0.000000;;1
87;3;40242;U16;120_VARtg_SF;120_VARtg;;1.000000;0.000000;VA;1
88;3;40243;I16;;120_VARtg_SF;;1.000000;0.000000;;1
89;3;40244;I16;120_VArRtg_SF;120_VArRtgQ1;;1.000000;0.000000;var;1
90;3;40245;I16;120_VArRtg_SF;120_VArRtgQ2;;1.000000;0.000000;var;1
91;3;40246;I16;120_VArRtg_SF;120_VArRtgQ3;;1.000000;0.000000;var;1
92;3;40247;I16;120_VArRtg_SF;120_VArRtgQ4;;1.000000;0.000000;var;1
```

```
93;3;40248;I16;;120_VArRtg_SF;;1.000000;0.000000;;1
94;3;40249;U16;120_ARtg_SF;120_ARtg;;1.000000;0.000000;A;1
95;3;40250;I16;;120_ARtg_SF;;1.000000;0.000000;;1
96;3;40251;I16;120_PFRtg_SF;120_PFRtgQ1;;1.000000;0.000000;cos();1
97;3;40252;I16;120_PFRtg_SF;120_PFRtgQ2;;1.000000;0.000000;cos();1
98;3;40253;I16;120_PFRtg_SF;120_PFRtgQ3;;1.000000;0.000000;cos();1
99;3;40254;I16;120_PFRtg_SF;120_PFRtgQ4;;1.000000;0.000000;cos();1
100;3;40255;I16;;120_PFRtg_SF;;1.000000;0.000000;;1
101;3;40256;U16;120_WHRtg_SF;120_WHRtg;;1.000000;0.000000;Wh;1
102;3;40257;I16;;120_WHRtg_SF;;1.000000;0.000000;;1
103;3;40258;U16;120_AhrRtg_SF;120_AhrRtg;;1.000000;0.000000;AH;1
104;3;40259;I16;;120_AhrRtg_SF;;1.000000;0.000000;;1
105;3;40260;U16;120_MaxChaRte_SF;120_MaxChaRte;;1.000000;0.000000;W;1
106;3;40261;I16;;120_MaxChaRte_SF;;1.000000;0.000000;;1
107;3;40262;U16;120_MaxDisChaRte_SF;120_MaxDisChaRte;;1.000000;0.000000;W;1
108;3;40263;I16;;120_MaxDisChaRte_SF;;1.000000;0.000000;;1
110;3;40265;I16;;121_tableId;;1.000000;0.000000;;1
111;3;40266;I16;;121_tableSize;;1.000000;0.000000;;1
112;3;40267;U16;121_WMax_SF;121_WMax;;1.000000;0.000000;W;1
113;3;40268;U16;121_VRef_SF;121_VRef;;1.000000;0.000000;V;1
114;3;40269;I16;121_VRefOfs_SF;121_VRefOfs;;1.000000;0.000000;V;1
115;3;40270;U16;121_VMinMax_SF;121_VMax;;1.000000;0.000000;V;1
116;3;40271;U16;121_VMinMax_SF;121_VMin;;1.000000;0.000000;V;1
117;3;40272;U16;121_VAMax_SF;121_VAMax;;1.000000;0.000000;VA;1
118;3;40273;I16;121_VArMax_SF;121_VArMaxQ1;;1.000000;0.000000;var;1
119;3;40274;I16;121_VArMax_SF;121_VArMaxQ2;;1.000000;0.000000;var;1
120;3;40275;I16;121_VArMax_SF;121_VArMaxQ3;;1.000000;0.000000;var;1
121;3;40276;I16;121_VArMax_SF;121_VArMaxQ4;;1.000000;0.000000;var;1
122;3;40277;U16;121_WGra_SF;121_WGra;;1.000000;0.000000;% WMax/sec;1
123;3;40278;I16;121_PFMin_SF;121_PFMinQ1;;1.000000;0.000000;cos();1
124;3;40279;I16;121_PFMin_SF;121_PFMinQ2;;1.000000;0.000000;cos();1
125;3;40280;I16;121_PFMin_SF;121_PFMinQ3;;1.000000;0.000000;cos();1
126;3;40281;I16;121_PFMin_SF;121_PFMinQ4;;1.000000;0.000000;cos();1
127;3;40282;U16;;121_VArAct;;1.000000;0.000000;;1
128;3;40283;U16;;121_ClcTotVA;;1.000000;0.000000;;1
129;3;40284;U16;121_MaxRmpRte_SF;121_MaxRmpRte;;1.000000;0.000000;% WGra;1
130;3;40285;U16;121_ECPNomHz_SF;121_ECPNomHz;;1.000000;0.000000;Hz;1
131;3;40286;U16;;121_ConnPh;;1.000000;0.000000;;1
132;3;40287;I16;;121_WMax_SF;;1.000000;0.000000;;1
133;3;40288;I16;;121_VRef_SF;;1.000000;0.000000;;1
134;3;40289;I16;;121_VRefOfs_SF;;1.000000;0.000000;;1
```

```
135;3;40290;I16;;121_VMinMax_SF;;1.000000;0.000000;;1
136;3;40291;I16;;121_VAMax_SF;;1.000000;0.000000;;1
137;3;40292;I16;;121_VArMax_SF;;1.000000;0.000000;;1
138;3;40293;I16;;121_WGra_SF;;1.000000;0.000000;;1
139;3;40294;I16;;121_PFMin_SF;;1.000000;0.000000;;1
140;3;40295;I16;;121_MaxRmpRte_SF;;1.000000;0.000000;;1
141;3;40296;I16;;121_ECPNomHz_SF;;1.000000;0.000000;;1
142;3;40297;I16;;122_tableId;;1.000000;0.000000;;1
143;3;40298;I16;;122_tableSize;;1.000000;0.000000;;1
144;3;40299;U16;;122_PVConn;;1.000000;0.000000;;1
145;3;40300;U16;;122_StorConn;;1.000000;0.000000;;1
146;3;40301;U16;;122_ECPConn;;1.000000;0.000000;;1
147;3;40302;U64;;122_ActWh;;1.000000;0.000000;Wh;1
148;3;40306;U64;;122_ActVAh;;1.000000;0.000000;VAh;1
149;3;40310;U64;;122_ActVArhQ1;;1.000000;0.000000;varh;1
150;3;40314;U64;;122_ActVArhQ2;;1.000000;0.000000;varh;1
151;3;40318;U64;;122_ActVArhQ3;;1.000000;0.000000;varh;1
152;3;40322;U64;;122_ActVArhQ4;;1.000000;0.000000;varh;1
153;3;40326;I16;122_VArAval_SF;122_VArAval;;1.000000;0.000000;var;1
154;3;40327;I16;;122_VArAval_SF;;1.000000;0.000000;;1
155;3;40328;U16;122_WAval_SF;122_WAval;;1.000000;0.000000;var;1
156;3;40329;I16;;122_WAval_SF;;1.000000;0.000000;;1
157;3;40330;U32;;122_StSetLimMsk;;1.000000;0.000000;;1
158;3;40332;U32;;122_StActCtl;;1.000000;0.000000;;1
159;3;40334_8;STRING;;122_TmSrc;;1.000000;0.000000;;1
160;3;40338;U32;;122_Tms;;1.000000;0.000000;Secs;1
161;3;40340;U16;;122_RtSt;;1.000000;0.000000;;1
162;3;40341;U16;122_Ris_SF;122_Ris;;1.000000;0.000000;ohms;1
163;3;40342;I16;;122_Ris_SF;;1.000000;0.000000;;1
164;3;40343;I16;;123_tableId;;1.000000;0.000000;;1
165;3;40344;I16;;123_tableSize;;1.000000;0.000000;;1
166;3;40345;U16;;123_Conn_WinTms;;1.000000;0.000000;Secs;4
167;3;40346;U16;;123_Conn_RvrtTms;;1.000000;0.000000;Secs;4
168;3;40347;U16;;123_Conn;;1.000000;0.000000;;4
169;3;40348;U16;123_WMaxLimPct_SF;123_WMaxLimPct;cmdPwrPercent;1.000000;0.000000;%
WMax;4
170;3;40349;U16;;123_WMaxLimPct_WinTms;;1.000000;0.000000;Secs;4
171;3;40350;U16;;123_WMaxLimPct_RvrtTms;;1.000000;0.000000;Secs;4
172;3;40351;U16;;123_WMaxLimPct_RmpTms;WMaxLimPct_RmpTms;1.000000;0.000000;Secs;4
173;3;40352;U16;;123_WMaxLim_Ena;WMaxLim_Ena;1.000000;0.000000;;4
174;3;40353;I16;123_OutPFSet_SF;123_OutPFSet;;1.000000;0.000000;cos();4
175;3;40354;U16;;123_OutPFSet_WinTms;;1.000000;0.000000;Secs;4
```

```
176;3;40355;U16;;123_OutPFSet_RvrtTms;;1.000000;0.000000;Secs;4
177;3;40356;U16;;123_OutPFSet_RmpTms;;1.000000;0.000000;Secs;4
178;3;40357;U16;;123_OutPFSet_Ena;;1.000000;0.000000;;4
179;3;40358;I16;123_VArPct_SF;123_VArWMaxPct;;1.000000;0.000000;% WMax;4
180;3;40359;I16;123_VArPct_SF;123_VArMaxPct;;1.000000;0.000000;% VArMax;4
181;3;40360;I16;123_VArPct_SF;123_VArAvalPct;;1.000000;0.000000;% VArAval;4
182;3;40361;U16;;123_VArPct_WinTms;;1.000000;0.000000;Secs;4
183;3;40362;U16;;123_VArPct_RvrtTms;;1.000000;0.000000;Secs;4
184;3;40363;U16;;123_VArPct_RmpTms;;1.000000;0.000000;Secs;4
185;3;40364;U16;;123_VArPct_Mod;;1.000000;0.000000;;4
186;3;40365;U16;;123_VArPct_Ena;;1.000000;0.000000;;4
187;3;40366;I16;;123_WMaxLimPct_SF;;1.000000;0.000000;;4
188;3;40367;I16;;123_OutPFSet_SF;;1.000000;0.000000;;4
189;3;40368;I16;;123_VArPct_SF;;1.000000;0.000000;;4
190;3;40369;I16;;124_tableId;;1.000000;0.000000;;1
191;3;40370;I16;;124_tableSize;;1.000000;0.000000;;1
192;3;40371;U16;124_WChaMax_SF;124_WChaMax;;1.000000;0.000000;W;1
193;3;40372;U16;124_WChaDisChaGra_SF;124_WChaGra;;1.000000;0.000000;% WChaMax/sec;1
194;3;40373;U16;124_WChaDisChaGra_SF;124_WDisChaGra;;1.000000;0.000000;% WChaMax/
sec;1
195;3;40374;U16;;124_StorCtl_Mod;;1.000000;0.000000;;1
196;3;40375;U16;124_VAChaMax_SF;124_VAChaMax;;1.000000;0.000000;VA;1
197;3;40376;U16;124_MinRsvPct_SF;124_MinRsvPct;;1.000000;0.000000;% WChaMax;1
198;3;40377;U16;124_ChaState_SF;124_ChaState;;1.000000;0.000000;% AhrRtg;1
199;3;40378;U16;124_StorAval_SF;124_StorAval;;1.000000;0.000000;AH;1
200;3;40379;U16;124_InBatV_SF;124_InBatV;;1.000000;0.000000;V;1
201;3;40380;U16;;124_ChaSt;;1.000000;0.000000;;1
202;3;40381;I16;124_InOutWRte_SF;124_OutWRte;;1.000000;0.000000;% WDisChaMax;1
203;3;40382;I16;124_InOutWRte_SF;124_InWRte;;1.000000;0.000000; % WChaMax;1
204;3;40383;U16;;124_InOutWRte_WinTms;;1.000000;0.000000;Secs;1
205;3;40384;U16;;124_InOutWRte_RvrtTms;;1.000000;0.000000;Secs;1
206;3;40385;U16;;124_InOutWRte_RmpTms;;1.000000;0.000000;Secs;1
207;3;40386;U16;;124_ChaGriSet;;1.000000;0.000000;;1
208;3;40387;I16;;124_WChaMax_SF;;1.000000;0.000000;;1
209;3;40388;I16;;124_WChaDisChaGra_SF;;1.000000;0.000000;;1
210;3;40389;I16;;124_VAChaMax_SF;;1.000000;0.000000;;1
211;3;40390;I16;;124_MinRsvPct_SF;;1.000000;0.000000;;1
212;3;40391;I16;;124_ChaState_SF;;1.000000;0.000000;;1
213;3;40392;I16;;124_StorAval_SF;;1.000000;0.000000;;1
214;3;40393;I16;;124_InBatV_SF;;1.000000;0.000000;;1
215;3;40394;I16;;124_InOutWRte_SF;;1.000000;0.000000;;1
216;3;40395;I16;;126_tableId;;1.000000;0.000000;;1
```

```
217;3;40396;I16;;126_tableSize;;1.000000;0.000000;;1
218;3;40397;U16;;126_ActCrv;;1.000000;0.000000;;1
219;3;40398;U16;;126_ModEna;;1.000000;0.000000;;1
220;3;40399;U16;;126_WinTms;;1.000000;0.000000;Secs;1
221;3;40400;U16;;126_RvrtTms;;1.000000;0.000000;Secs;1
222;3;40401;U16;;126_RmpTms;;1.000000;0.000000;Secs;1
223;3;40402;U16;;126_NCrv;;1.000000;0.000000;;1
224;3;40403;U16;;126_NPt;;1.000000;0.000000;;1
225;3;40404;I16;;126_V_SF;;1.000000;0.000000;;1
226;3;40405;I16;;126_DeptRef_SF;;1.000000;0.000000;;1
227;3;40406;I16;;126_RmpIncDec_SF;;1.000000;0.000000;;1
228;3;40407;U16;;126_0_ActPt;;1.000000;0.000000;;1
229;3;40408;U16;;126_0_DeptRef;;1.000000;0.000000;;1
230;3;40409;U16;126_V_SF;126_0_V1;;1.000000;0.000000;% VRef;1
231;3;40410;I16;126_DeptRef_SF;126_0_VAr1;;1.000000;0.000000;;1
232;3;40411;U16;126_V_SF;126_0_V2;;1.000000;0.000000;% VRef;1
233;3;40412;I16;126_DeptRef_SF;126_0_VAr2;;1.000000;0.000000;;1
234;3;40413;U16;126_V_SF;126_0_V3;;1.000000;0.000000;% VRef;1
235;3;40414;I16;126_DeptRef_SF;126_0_VAr3;;1.000000;0.000000;Various;1
236;3;40415;U16;126_V_SF;126_0_V4;;1.000000;0.000000;;1
237;3;40416;I16;126_DeptRef_SF;126_0_VAr4;;1.000000;0.000000;;1
238;3;40417;U16;126_V_SF;126_0_V5;;1.000000;0.000000;% VRef;1
239;3;40418;I16;126_DeptRef_SF;126_0_VAr5;;1.000000;0.000000;;1
240;3;40419;U16;126_V_SF;126_0_V6;;1.000000;0.000000;% VRef;1
241;3;40420;I16;126_DeptRef_SF;126_0_VAr6;;1.000000;0.000000;;1
242;3;40421;U16;126_V_SF;126_0_V7;;1.000000;0.000000;% VRef;1
243;3;40422;I16;126_DeptRef_SF;126_0_VAr7;;1.000000;0.000000;;1
244;3;40423;U16;126_V_SF;126_0_V8;;1.000000;0.000000;% VRef;1
245;3;40424;I16;126_DeptRef_SF;126_0_VAr8;;1.000000;0.000000;;1
246;3;40425;U16;126_V_SF;126_0_V9;;1.000000;0.000000;% VRef;1
247;3;40426;I16;126_DeptRef_SF;126_0_VAr9;;1.000000;0.000000;;1
248;3;40427;U16;126_V_SF;126_0_V10;;1.000000;0.000000;% VRef;1
249;3;40428;I16;126_DeptRef_SF;126_0_VAr10;;1.000000;0.000000;;1
250;3;40429;U16;126_V_SF;126_0_V11;;1.000000;0.000000;% VRef;1
251;3;40430;I16;126_DeptRef_SF;126_0_VAr11;;1.000000;0.000000;;1
252;3;40431;U16;126_V_SF;126_0_V12;;1.000000;0.000000;% VRef;1
253;3;40432;I16;126_DeptRef_SF;126_0_VAr12;;1.000000;0.000000;;1
254;3;40433;U16;126_V_SF;126_0_V13;;1.000000;0.000000;% VRef;1
255;3;40434;I16;126_DeptRef_SF;126_0_VAr13;;1.000000;0.000000;;1
256;3;40435;U16;126_V_SF;126_0_V14;;1.000000;0.000000;% VRef;1
257;3;40436;I16;126_DeptRef_SF;126_0_VAr14;;1.000000;0.000000;;1
```

```
258;3;40437;U16;126_V_SF;126_0_V15;;1.000000;0.000000;% VRef;1
259;3;40438;I16;126_DeptRef_SF;126_0_VAr15;;1.000000;0.000000;;1
260;3;40439;U16;126_V_SF;126_0_V16;;1.000000;0.000000;% VRef;1
261;3;40440;I16;126_DeptRef_SF;126_0_VAr16;;1.000000;0.000000;;1
262;3;40441;U16;126_V_SF;126_0_V17;;1.000000;0.000000;% VRef;1
263;3;40442;I16;126_DeptRef_SF;126_0_VAr17;;1.000000;0.000000;;1
264;3;40443;U16;126_V_SF;126_0_V18;;1.000000;0.000000;% VRef;1
265;3;40444;I16;126_DeptRef_SF;126_0_VAr18;;1.000000;0.000000;;1
266;3;40445;U16;126_V_SF;126_0_V19;;1.000000;0.000000;% VRef;1
267;3;40446;I16;126_DeptRef_SF;126_0_VAr19;;1.000000;0.000000;;1
268;3;40447;U16;126_V_SF;126_0_V20;;1.000000;0.000000;% VRef;1
269;3;40448;I16;126_DeptRef_SF;126_0_VAr20;;1.000000;0.000000;;1
270;3;40449_16;STRING;;126_0_CrvNam;;1.000000;0.000000;;1
271;3;40457;U16;;126_0_RmpTms;;1.000000;0.000000;Secs;1
272;3;40458;U16;126_RmpIncDec_SF;126_0_RmpDecTmm;;1.000000;0.000000;% ref_value/
min;1
273;3;40459;U16;126_RmpIncDec_SF;126_0_RmpIncTmm;;1.000000;0.000000;% ref_value/
min;1
274;3;40460;U16;;126_0_ReadOnly;;1.000000;0.000000;;1
275;3;40461;I16;;127_tableId;;1.000000;0.000000;;1
276;3;40462;I16;;127_tableSize;;1.000000;0.000000;;1
277;3;40463;U16;127_WGra_SF;127_WGra;;1.000000;0.000000;% PM/Hz;1
278;3;40464;I16;127_HzStrStop_SF;127_HzStr;;1.000000;0.000000;Hz;1
279;3;40465;I16;127_HzStrStop_SF;127_HzStop;;1.000000;0.000000;Hz;1
280;3;40466;U16;;127_HysEna;;1.000000;0.000000;;1
281;3;40467;U16;;127_ModEna;;1.000000;0.000000;;1
282;3;40468;U16;127_RmpIncDec_SF;127_HzStopWGra;;1.000000;0.000000;% WMax/min;1
283;3;40469;I16;;127_WGra_SF;;1.000000;0.000000;;1
284;3;40470;I16;;127_HzStrStop_SF;;1.000000;0.000000;;1
285;3;40471;I16;;127_RmpIncDec_SF;;1.000000;0.000000;;1
287;3;40473;I16;;128_tableId;;1.000000;0.000000;;1
288;3;40474;I16;;128_tableSize;;1.000000;0.000000;;1
289;3;40475;U16;;128_ArGraMod;;1.000000;0.000000;;1
290;3;40476;U16;128_ArGra_SF;128_ArGraSag;;1.000000;0.000000;%ARtg/%dV;1
291;3;40477;U16;128_ArGra_SF;128_ArGraSwell;;1.000000;0.000000;%ARtg/%dV;1
292;3;40478;U16;;128_ModEna;;1.000000;0.000000;;1
293;3;40479;U16;;128_FilTms;;1.000000;0.000000;Secs;1
294;3;40480;U16;128_VRefPct_SF;128_DbVMin;;1.000000;0.000000;% VRef;1
295;3;40481;U16;128_VRefPct_SF;128_DbVMax;;1.000000;0.000000;% VRef;1
296;3;40482;U16;128_VRefPct_SF;128_BlkZnV;;1.000000;0.000000;% VRef;1
297;3;40483;U16;128_VRefPct_SF;128_HysBlkZnV;;1.000000;0.000000;% VRef;1
298;3;40484;U16;;128_BlkZnTmms;;1.000000;0.000000;mSecs;1
```

```
299;3;40485;U16;;128_HoldTmms;;1.000000;0.000000;mSecs;1
300;3;40486;I16;;128_ArGra_SF;;1.000000;0.000000;;1
301;3;40487;I16;;128_VRefPct_SF;;1.000000;0.000000;;1
303;3;40489;I16;;131_tableId;;1.000000;0.000000;;1
304;3;40490;I16;;131_tableSize;;1.000000;0.000000;;1
305;3;40491;U16;;131_ActCrv;;1.000000;0.000000;;1
306;3;40492;U16;;131_ModEna;;1.000000;0.000000;;1
307;3;40493;U16;;131_WinTms;;1.000000;0.000000;Secs;1
308;3;40494;U16;;131_RvrtTms;;1.000000;0.000000;Secs;1
309;3;40495;U16;;131_RmpTms;;1.000000;0.000000;Secs;1
310;3;40496;U16;;131_NCrv;;1.000000;0.000000;;1
311;3;40497;U16;;131_NPt;;1.000000;0.000000;;1
312;3;40498;I16;;131_W_SF;;1.000000;0.000000;;1
313;3;40499;I16;;131_PF_SF;;1.000000;0.000000;;1
314;3;40500;I16;;131_RmpIncDec_SF;;1.000000;0.000000;;1
315;3;40501;U16;;131_0_ActPt;;1.000000;0.000000;;1
316;3;40502;I16;131_W_SF;131_0_W1;;1.000000;0.000000;% WMax;1
317;3;40503;I16;131_PF_SF;131_0_PF1;;1.000000;0.000000;cos();1
318;3;40504;I16;131_W_SF;131_0_W2;;1.000000;0.000000;% WMax;1
319;3;40505;I16;131_PF_SF;131_0_PF2;;1.000000;0.000000;cos();1
320;3;40506;I16;131_W_SF;131_0_W3;;1.000000;0.000000;% WMax;1
321;3;40507;I16;131_PF_SF;131_0_PF3;;1.000000;0.000000;cos();1
322;3;40508;I16;131_W_SF;131_0_W4;;1.000000;0.000000;% WMax;1
323;3;40509;I16;131_PF_SF;131_0_PF4;;1.000000;0.000000;cos();1
324;3;40510;I16;131_W_SF;131_0_W5;;1.000000;0.000000;% WMax;1
325;3;40511;I16;131_PF_SF;131_0_PF5;;1.000000;0.000000;cos();1
326;3;40512;I16;131_W_SF;131_0_W6;;1.000000;0.000000;% WMax;1
327;3;40513;I16;131_PF_SF;131_0_PF6;;1.000000;0.000000;cos();1
328;3;40514;I16;131_W_SF;131_0_W7;;1.000000;0.000000;% WMax;1
329;3;40515;I16;131_PF_SF;131_0_PF7;;1.000000;0.000000;cos();1
330;3;40516;I16;131_W_SF;131_0_W8;;1.000000;0.000000;% WMax;1
331;3;40517;I16;131_PF_SF;131_0_PF8;;1.000000;0.000000;cos();1
332;3;40518;I16;131_W_SF;131_0_W9;;1.000000;0.000000;% WMax;1
333;3;40519;I16;131_PF_SF;131_0_PF9;;1.000000;0.000000;cos();1
334;3;40520;I16;131_W_SF;131_0_W10;;1.000000;0.000000;% WMax;1
335;3;40521;I16;131_PF_SF;131_0_PF10;;1.000000;0.000000;cos();1
336;3;40522;I16;131_W_SF;131_0_W11;;1.000000;0.000000;% WMax;1
337;3;40523;I16;131_PF_SF;131_0_PF11;;1.000000;0.000000;cos();1
338;3;40524;I16;131_W_SF;131_0_W12;;1.000000;0.000000;% WMax;1
339;3;40525;I16;131_PF_SF;131_0_PF12;;1.000000;0.000000;cos();1
340;3;40526;I16;131_W_SF;131_0_W13;;1.000000;0.000000;% WMax;1
```

```
341;3;40527;I16;131_PF_SF;131_0_PF13;;1.000000;0.000000;cos();1
342;3;40528;I16;131_W_SF;131_0_W14;;1.000000;0.000000;% WMax;1
343;3;40529;I16;131_PF_SF;131_0_PF14;;1.000000;0.000000;cos();1
344;3;40530;I16;131_W_SF;131_0_W15;;1.000000;0.000000;% WMax;1
345;3;40531;I16;131_PF_SF;131_0_PF15;;1.000000;0.000000;cos();1
346;3;40532;I16;131_W_SF;131_0_W16;;1.000000;0.000000;% WMax;1
347;3;40533;I16;131_PF_SF;131_0_PF16;;1.000000;0.000000;cos();1
348;3;40534;I16;131_W_SF;131_0_W17;;1.000000;0.000000;% WMax;1
349;3;40535;I16;131_PF_SF;131_0_PF17;;1.000000;0.000000;cos();1
350;3;40536;I16;131_W_SF;131_0_W18;;1.000000;0.000000;% WMax;1
351;3;40537;I16;131_PF_SF;131_0_PF18;;1.000000;0.000000;cos();1
352;3;40538;I16;131_W_SF;131_0_W19;;1.000000;0.000000;% WMax;1
353;3;40539;I16;131_PF_SF;131_0_PF19;;1.000000;0.000000;cos();1
354;3;40540;I16;131_W_SF;131_0_W20;;1.000000;0.000000;% WMax;1
355;3;40541;I16;131_PF_SF;131_0_PF20;;1.000000;0.000000;cos();1
356;3;40542_16;STRING;;131_0_CrvNam;;1.000000;0.000000;;1
357;3;40550;U16;;131_0_RmpPT1Tms;;1.000000;0.000000;Secs;1
358;3;40551;U16;131_RmpIncDec_SF;131_0_RmpDecTmm;;1.000000;0.000000;% PF/min;1
359;3;40552;U16;131_RmpIncDec_SF;131_0_RmpIncTmm;;1.000000;0.000000;% PF/min;1
360;3;40553;U16;;131_0_ReadOnly;;1.000000;0.000000;;1
362;3;40555;I16;;132_tableId;;1.000000;0.000000;;1
363;3;40556;I16;;132_tableSize;;1.000000;0.000000;;1
364;3;40557;U16;;132_ActCrv;;1.000000;0.000000;;1
365;3;40558;U16;;132_ModEna;;1.000000;0.000000;;1
366;3;40559;U16;;132_WinTms;;1.000000;0.000000;Secs;1
367;3;40560;U16;;132_RvrtTms;;1.000000;0.000000;Secs;1
368;3;40561;U16;;132_RmpTms;;1.000000;0.000000;Secs;1
369;3;40562;U16;;132_NCrv;;1.000000;0.000000;;1
370;3;40563;U16;;132_NPt;;1.000000;0.000000;;1
371;3;40564;I16;;132_V_SF;;1.000000;0.000000;;1
372;3;40565;I16;;132_DeptRef_SF;;1.000000;0.000000;;1
373;3;40566;I16;;132_RmpIncDec_SF;;1.000000;0.000000;;1
374;3;40567;U16;;132_0_ActPt;;1.000000;0.000000;;1
375;3;40568;U16;;132_0_DeptRef;;1.000000;0.000000;;1
376;3;40569;U16;132_V_SF;132_0_V1;;1.000000;0.000000;% VRef;1
377;3;40570;I16;132_DeptRef_SF;132_0_W1;;1.000000;0.000000;% VRef;1
378;3;40571;U16;132_V_SF;132_0_V2;;1.000000;0.000000;% VRef;1
379;3;40572;I16;132_DeptRef_SF;132_0_W2;;1.000000;0.000000;% VRef;1
380;3;40573;U16;132_V_SF;132_0_V3;;1.000000;0.000000;% VRef;1
381;3;40574;I16;132_DeptRef_SF;132_0_W3;;1.000000;0.000000;% VRef;1
382;3;40575;U16;132_V_SF;132_0_V4;;1.000000;0.000000;% VRef;1
```

```
383;3;40576;I16;132_DeptRef_SF;132_0_W4;;1.000000;0.000000;% VRef;1
384;3;40577;U16;132_V_SF;132_0_V5;;1.000000;0.000000;% VRef;1
385;3;40578;I16;132_DeptRef_SF;132_0_W5;;1.000000;0.000000;% VRef;1
386;3;40579;U16;132_V_SF;132_0_V6;;1.000000;0.000000;% VRef;1
387;3;40580;I16;132_DeptRef_SF;132_0_W6;;1.000000;0.000000;% VRef;1
388;3;40581;U16;132_V_SF;132_0_V7;;1.000000;0.000000;% VRef;1
389;3;40582;I16;132_DeptRef_SF;132_0_W7;;1.000000;0.000000;% VRef;1
390;3;40583;U16;132_V_SF;132_0_V8;;1.000000;0.000000;% VRef;1
391;3;40584;I16;132_DeptRef_SF;132_0_W8;;1.000000;0.000000;% VRef;1
392;3;40585;U16;132_V_SF;132_0_V9;;1.000000;0.000000;% VRef;1
393;3;40586;I16;132_DeptRef_SF;132_0_W9;;1.000000;0.000000;% VRef;1
394;3;40587;U16;132_V_SF;132_0_V10;;1.000000;0.000000;% VRef;1
395;3;40588;I16;132_DeptRef_SF;132_0_W10;;1.000000;0.000000;% VRef;1
396;3;40589;U16;132_V_SF;132_0_V11;;1.000000;0.000000;% VRef;1
397;3;40590;I16;132_DeptRef_SF;132_0_W11;;1.000000;0.000000;% VRef;1
398;3;40591;U16;132_V_SF;132_0_V12;;1.000000;0.000000;% VRef;1
399;3;40592;I16;132_DeptRef_SF;132_0_W12;;1.000000;0.000000;% VRef;1
400;3;40593;U16;132_V_SF;132_0_V13;;1.000000;0.000000;% VRef;1
401;3;40594;I16;132_DeptRef_SF;132_0_W13;;1.000000;0.000000;% VRef;1
402;3;40595;U16;132_V_SF;132_0_V14;;1.000000;0.000000;% VRef;1
403;3;40596;I16;132_DeptRef_SF;132_0_W14;;1.000000;0.000000;% VRef;1
404;3;40597;U16;132_V_SF;132_0_V15;;1.000000;0.000000;% VRef;1
405;3;40598;I16;132_DeptRef_SF;132_0_W15;;1.000000;0.000000;% VRef;1
406;3;40599;U16;132_V_SF;132_0_V16;;1.000000;0.000000;% VRef;1
407;3;40600;I16;132_DeptRef_SF;132_0_W16;;1.000000;0.000000;% VRef;1
408;3;40601;U16;132_V_SF;132_0_V17;;1.000000;0.000000;% VRef;1
409;3;40602;I16;132_DeptRef_SF;132_0_W17;;1.000000;0.000000;% VRef;1
410;3;40603;U16;132_V_SF;132_0_V18;;1.000000;0.000000;% VRef;1
411;3;40604;I16;132_DeptRef_SF;132_0_W18;;1.000000;0.000000;% VRef;1
412;3;40605;U16;132_V_SF;132_0_V19;;1.000000;0.000000;% VRef;1
413;3;40606;I16;132_DeptRef_SF;132_0_W19;;1.000000;0.000000;% VRef;1
414;3;40607;U16;132_V_SF;132_0_V20;;1.000000;0.000000;% VRef;1
415;3;40608;I16;132_DeptRef_SF;132_0_W20;;1.000000;0.000000;% VRef;1
416;3;40609_16;STRING;;132_0_CrvNam;;1.000000;0.000000;;1
417;3;40617;U16;;132_0_RmpPt1Tms;;1.000000;0.000000;Secs;1
418;3;40618;U16;132_RmpIncDec_SF;132_0_RmpDecTmm;;1.000000;0.000000;% WMax/min;1
419;3;40619;U16;132_RmpIncDec_SF;132_0_RmpIncTmm;;1.000000;0.000000;% WMax/min;1
420;3;40620;U16;;132_0_ReadOnly;;1.000000;0.000000;;1
421;3;40621;I16;;160_tableId;;1.000000;0.000000;;1
422;3;40622;I16;;160_tableSize;;1.000000;0.000000;;1
423;3;40623;I16;;160_DCA_SF;;1.000000;0.000000;;4
```

```
424;3;40624;I16;;160_DCV_SF;;1.000000;0.000000;;4
425;3;40625;I16;;160_DCW_SF;;1.000000;0.000000;;4
426;3;40626;I16;;160_DCWH_SF;;1.000000;0.000000;;4
427;3;40627;U32;;160_Evt;;1.000000;0.000000;;4
428;3;40629;U32;;160_N;;1.000000;0.000000;;4
429;3;40630;U16;;160_TmsPer;;1.000000;0.000000;;4
430;3;40631;U16;;160_0_ID;;1.000000;0.000000;;4
431;3;40632_16;STRING;;160_0_IDStr;;1.000000;0.000000;;4
432;3;40640;U16;160_DCA_SF;160_0_DCA;;1.000000;0.000000;A;4
433;3;40641;U16;160_DCV_SF;160_0_DCV;;1.000000;0.000000;V;4
434;3;40642;U16;160_DCW_SF;160_0_DCW;;1.000000;0.000000;W;4
435;3;40643;U32;160_DCWH_SF;160_0_DCWH;;1.000000;0.000000;Wh;4
436;3;40645;U32;;160_0_Tms;;1.000000;0.000000;Secs;4
437;3;40647;I16;;160_0_Tmp;;1.000000;0.000000;C;4
438;3;40648;U16;;160_0_DCSt;;1.000000;0.000000;;4
439;3;40649;U32;;160_0_DCEvt;;1.000000;0.000000;;4
440;3;40651;U16;;160_1_ID;;1.000000;0.000000;;4
441;3;40652_16;STRING;;160_1_IDStr;;1.000000;0.000000;;4
442;3;40660;U16;160_DCA_SF;160_1_DCA;;1.000000;0.000000;A;4
443;3;40661;U16;160_DCV_SF;160_1_DCV;;1.000000;0.000000;V;4
444;3;40662;U16;160_DCW_SF;160_1_DCW;;1.000000;0.000000;W;4
445;3;40663;U32;160_DCWH_SF;160_1_DCWH;;1.000000;0.000000;Wh;4
446;3;40665;U32;;160_1_Tms;;1.000000;0.000000;Secs;4
447;3;40667;I16;;160_1_Tmp;;1.000000;0.000000;C;4
448;3;40668;U16;;160_1_DCSt;;1.000000;0.000000;;4
449;3;40669;U32;;160_1_DCEvt;;1.000000;0.000000;;4
450;3;40671;U16;;160_2_ID;;1.000000;0.000000;;4
451;3;40672_16;STRING;;160_2_IDStr;;1.000000;0.000000;;4
452;3;40680;U16;160_DCA_SF;160_2_DCA;;1.000000;0.000000;A;4
453;3;40681;U16;160_DCV_SF;160_2_DCV;;1.000000;0.000000;V;4
454;3;40682;U16;160_DCW_SF;160_2_DCW;;1.000000;0.000000;W;4
455;3;40683;U32;160_DCWH_SF;160_2_DCWH;;1.000000;0.000000;Wh;4
456;3;40685;U32;;160_2_Tms;;1.000000;0.000000;Secs;4
457;3;40687;I16;;160_2_Tmp;;1.000000;0.000000;C;4
458;3;40688;U16;;160_2_DCSt;;1.000000;0.000000;;4
459;3;40689;U32;;160_2_DCEvt;;1.000000;0.000000;;4
460;3;40691;U16;;160_3_ID;;1.000000;0.000000;;4
461;3;40692_16;STRING;;160_3_IDStr;;1.000000;0.000000;;4
462;3;40700;U16;160_DCA_SF;160_3_DCA;;1.000000;0.000000;A;4
463;3;40701;U16;160_DCV_SF;160_3_DCV;;1.000000;0.000000;V;4
464;3;40702;U16;160_DCW_SF;160_3_DCW;;1.000000;0.000000;W;4
```

```
465;3;40703;U32;160_DCWH_SF;160_3_DCWH;;1.000000;0.000000;Wh;4
466;3;40705;U32;;160_3_Tms;;1.000000;0.000000;Secs;4
467;3;40707;I16;;160_3_Tmp;;1.000000;0.000000;C;4
468;3;40708;U16;;160_3_DCSt;;1.000000;0.000000;;4
469;3;40709;U32;;160_3_DCEvt;;1.000000;0.000000;;4
470;3;40711;U16;;160_4_ID;;1.000000;0.000000;;4
471;3;40712_16;STRING;;160_4_IDStr;;1.000000;0.000000;;4
472;3;40720;U16;160_DCA_SF;160_4_DCA;;1.000000;0.000000;A;4
473;3;40721;U16;160_DCV_SF;160_4_DCV;;1.000000;0.000000;V;4
474;3;40722;U16;160_DCW_SF;160_4_DCW;;1.000000;0.000000;W;4
475;3;40723;U32;160_DCWH_SF;160_4_DCWH;;1.000000;0.000000;Wh;4
476;3;40725;U32;;160_4_Tms;;1.000000;0.000000;Secs;4
477;3;40727;I16;;160_4_Tmp;;1.000000;0.000000;C;4
478;3;40728;U16;;160_4_DCSt;;1.000000;0.000000;;4
479;3;40729;U32;;160_4_DCEvt;;1.000000;0.000000;;4
480;3;40731;U16;;160_5_ID;;1.000000;0.000000;;4
481;3;40732_16;STRING;;160_5_IDStr;;1.000000;0.000000;;4
482;3;40740;U16;160_DCA_SF;160_5_DCA;;1.000000;0.000000;A;4
483;3;40741;U16;160_DCV_SF;160_5_DCV;;1.000000;0.000000;V;4
484;3;40742;U16;160_DCW_SF;160_5_DCW;;1.000000;0.000000;W;4
485;3;40743;U32;160_DCWH_SF;160_5_DCWH;;1.000000;0.000000;Wh;4
486;3;40745;U32;;160_5_Tms;;1.000000;0.000000;Secs;4
487;3;40747;I16;;160_5_Tmp;;1.000000;0.000000;C;4
488;3;40748;U16;;160_5_DCSt;;1.000000;0.000000;;4
489;3;40749;U32;;160_5_DCEvt;;1.000000;0.000000;;4
490;3;40751;I16;;129_tableId;;1.000000;0.000000;;1
491;3;40752;I16;;129_tableSize;;1.000000;0.000000;;1
492;3;40753;U16;;129_ActCrv;;1.000000;0.000000;;1
493;3;40754;U16;;129_ModEna;;1.000000;0.000000;;1
494;3;40755;U16;;129_WinTms;;1.000000;0.000000;Secs;1
495;3;40756;U16;;129_RvrtTms;;1.000000;0.000000;Secs;1
496;3;40757;U16;;129_RmpTms;;1.000000;0.000000;Secs;1
497;3;40758;U16;;129_NCrv;;1.000000;0.000000;;1
498;3;40759;U16;;129_NPt;;1.000000;0.000000;;1
499;3;40760;I16;;129_Tms_SF;;1.000000;0.000000;;1
500;3;40761;I16;;129_V_SF;;1.000000;0.000000;;1
502;3;40763;U16;;129_0_ActPt;;1.000000;0.000000;;1
503;3;40764;U16;129_Tms_SF;129_0_Tms1;;1.000000;0.000000;Secs;1
504;3;40765;U16;129_V_SF;129_0_V1;;1.000000;0.000000;% VRef;1
505;3;40766;U16;129_Tms_SF;129_0_Tms2;;1.000000;0.000000;Secs;1
506;3;40767;U16;129_V_SF;129_0_V2;;1.000000;0.000000;% VRef;1
```

```
507;3;40768;U16;129_Tms_SF;129_0_Tms3;;1.000000;0.000000;Secs;1
508;3;40769;U16;129_V_SF;129_0_V3;;1.000000;0.000000;% VRef;1
509;3;40770;U16;129_Tms_SF;129_0_Tms4;;1.000000;0.000000;Secs;1
510;3;40771;U16;129_V_SF;129_0_V4;;1.000000;0.000000;% VRef;1
511;3;40772;U16;129_Tms_SF;129_0_Tms5;;1.000000;0.000000;Secs;1
512;3;40773;U16;129_V_SF;129_0_V5;;1.000000;0.000000;% VRef;1
513;3;40774;U16;129_Tms_SF;129_0_Tms6;;1.000000;0.000000;Secs;1
514;3;40775;U16;129_V_SF;129_0_V6;;1.000000;0.000000;% VRef;1
515;3;40776;U16;129_Tms_SF;129_0_Tms7;;1.000000;0.000000;Secs;1
516;3;40777;U16;129_V_SF;129_0_V7;;1.000000;0.000000;% VRef;1
517;3;40778;U16;129_Tms_SF;129_0_Tms8;;1.000000;0.000000;Secs;1
518;3;40779;U16;129_V_SF;129_0_V8;;1.000000;0.000000;% VRef;1
519;3;40780;U16;129_Tms_SF;129_0_Tms9;;1.000000;0.000000;Secs;1
520;3;40781;U16;129_V_SF;129_0_V9;;1.000000;0.000000;% VRef;1
521;3;40782;U16;129_Tms_SF;129_0_Tms10;;1.000000;0.000000;Secs;1
522;3;40783;U16;129_V_SF;129_0_V10;;1.000000;0.000000;% VRef;1
523;3;40784;U16;129_Tms_SF;129_0_Tms11;;1.000000;0.000000;Secs;1
524;3;40785;U16;129_V_SF;129_0_V11;;1.000000;0.000000;% VRef;1
525;3;40786;U16;129_Tms_SF;129_0_Tms12;;1.000000;0.000000;Secs;1
526;3;40787;U16;129_V_SF;129_0_V12;;1.000000;0.000000;% VRef;1
527;3;40788;U16;129_Tms_SF;129_0_Tms13;;1.000000;0.000000;Secs;1
528;3;40789;U16;129_V_SF;129_0_V13;;1.000000;0.000000;% VRef;1
529;3;40790;U16;129_Tms_SF;129_0_Tms14;;1.000000;0.000000;Secs;1
530;3;40791;U16;129_V_SF;129_0_V14;;1.000000;0.000000;% VRef;1
531;3;40792;U16;129_Tms_SF;129_0_Tms15;;1.000000;0.000000;Secs;1
532;3;40793;U16;129_V_SF;129_0_V15;;1.000000;0.000000;% VRef;1
533;3;40794;U16;129_Tms_SF;129_0_Tms16;;1.000000;0.000000;Secs;1
534;3;40795;U16;129_V_SF;129_0_V16;;1.000000;0.000000;% VRef;1
535;3;40796;U16;129_Tms_SF;129_0_Tms17;;1.000000;0.000000;Secs;1
536;3;40797;U16;129_V_SF;129_0_V17;;1.000000;0.000000;% VRef;1
537;3;40798;U16;129_Tms_SF;129_0_Tms18;;1.000000;0.000000;Secs;1
538;3;40799;U16;129_V_SF;129_0_V18;;1.000000;0.000000;% VRef;1
539;3;40800;U16;129_Tms_SF;129_0_Tms19;;1.000000;0.000000;Secs;1
540;3;40801;U16;129_V_SF;129_0_V19;;1.000000;0.000000;% VRef;1
541;3;40802;U16;129_Tms_SF;129_0_Tms20;;1.000000;0.000000;Secs;1
542;3;40803;U16;129_V_SF;129_0_V20;;1.000000;0.000000;% VRef;1
543;3;40804_16;STRING;;129_0_CrvNam;;1.000000;0.000000;;1
544;3;40812;U16;;129_0_ReadOnly;;1.000000;0.000000;;1
545;3;40813;I16;;130_tableId;;1.000000;0.000000;;1
546;3;40814;I16;;130_tableSize;;1.000000;0.000000;;1
547;3;40815;U16;;130_ActCrv;;1.000000;0.000000;;1
```

```
548;3;40816;U16;;130_ModEna;;1.000000;0.000000;;1
549;3;40817;U16;;130_WinTms;;1.000000;0.000000;Secs;1
550;3;40818;U16;;130_RvrtTms;;1.000000;0.000000;Secs;1
551;3;40819;U16;;130_RmpTms;;1.000000;0.000000;Secs;1
552;3;40820;U16;;130_NCrv;;1.000000;0.000000;;1
553;3;40821;U16;;130_NPt;;1.000000;0.000000;;1
554;3;40822;I16;;130_Tms_SF;;1.000000;0.000000;;1
555;3;40823;I16;;130_V_SF;;1.000000;0.000000;;1
557;3;40825;U16;;130_0_ActPt;;1.000000;0.000000;;1
558;3;40826;U16;130_Tms_SF;130_0_Tms1;;1.000000;0.000000;Secs;1
559;3;40827;U16;130_V_SF;130_0_V1;;1.000000;0.000000;% VRef;1
560;3;40828;U16;130_Tms_SF;130_0_Tms2;;1.000000;0.000000;Secs;1
561;3;40829;U16;130_V_SF;130_0_V2;;1.000000;0.000000;% VRef;1
562;3;40830;U16;130_Tms_SF;130_0_Tms3;;1.000000;0.000000;Secs;1
563;3;40831;U16;130_V_SF;130_0_V3;;1.000000;0.000000;% VRef;1
564;3;40832;U16;130_Tms_SF;130_0_Tms4;;1.000000;0.000000;Secs;1
565;3;40833;U16;130_V_SF;130_0_V4;;1.000000;0.000000;% VRef;1
566;3;40834;U16;130_Tms_SF;130_0_Tms5;;1.000000;0.000000;Secs;1
567;3;40835;U16;130_V_SF;130_0_V5;;1.000000;0.000000;% VRef;1
568;3;40836;U16;130_Tms_SF;130_0_Tms6;;1.000000;0.000000;Secs;1
569;3;40837;U16;130_V_SF;130_0_V6;;1.000000;0.000000;% VRef;1
570;3;40838;U16;130_Tms_SF;130_0_Tms7;;1.000000;0.000000;Secs;1
571;3;40839;U16;130_V_SF;130_0_V7;;1.000000;0.000000;% VRef;1
572;3;40840;U16;130_Tms_SF;130_0_Tms8;;1.000000;0.000000;Secs;1
573;3;40841;U16;130_V_SF;130_0_V8;;1.000000;0.000000;% VRef;1
574;3;40842;U16;130_Tms_SF;130_0_Tms9;;1.000000;0.000000;Secs;1
575;3;40843;U16;130_V_SF;130_0_V9;;1.000000;0.000000;% VRef;1
576;3;40844;U16;130_Tms_SF;130_0_Tms10;;1.000000;0.000000;Secs;1
577;3;40845;U16;130_V_SF;130_0_V10;;1.000000;0.000000;% VRef;1
578;3;40846;U16;130_Tms_SF;130_0_Tms11;;1.000000;0.000000;Secs;1
579;3;40847;U16;130_V_SF;130_0_V11;;1.000000;0.000000;% VRef;1
580;3;40848;U16;130_Tms_SF;130_0_Tms12;;1.000000;0.000000;Secs;1
581;3;40849;U16;130_V_SF;130_0_V12;;1.000000;0.000000;% VRef;1
582;3;40850;U16;130_Tms_SF;130_0_Tms13;;1.000000;0.000000;Secs;1
583;3;40851;U16;130_V_SF;130_0_V13;;1.000000;0.000000;% VRef;1
584;3;40852;U16;130_Tms_SF;130_0_Tms14;;1.000000;0.000000;Secs;1
585;3;40853;U16;130_V_SF;130_0_V14;;1.000000;0.000000;% VRef;1
586;3;40854;U16;130_Tms_SF;130_0_Tms15;;1.000000;0.000000;Secs;1
587;3;40855;U16;130_V_SF;130_0_V15;;1.000000;0.000000;% VRef;1
588;3;40856;U16;130_Tms_SF;130_0_Tms16;;1.000000;0.000000;Secs;1
589;3;40857;U16;130_V_SF;130_0_V16;;1.000000;0.000000;% VRef;1
```

```
590;3;40858;U16;130_Tms_SF;130_0_Tms17;;1.000000;0.000000;Secs;1
591;3;40859;U16;130_V_SF;130_0_V17;;1.000000;0.000000;% VRef;1
592;3;40860;U16;130_Tms_SF;130_0_Tms18;;1.000000;0.000000;Secs;1
593;3;40861;U16;130_V_SF;130_0_V18;;1.000000;0.000000;% VRef;1
594;3;40862;U16;130_Tms_SF;130_0_Tms19;;1.000000;0.000000;Secs;1
595;3;40863;U16;130_V_SF;130_0_V19;;1.000000;0.000000;% VRef;1
596;3;40864;U16;130_Tms_SF;130_0_Tms20;;1.000000;0.000000;Secs;1
597;3;40865;U16;130_V_SF;130_0_V20;;1.000000;0.000000;% VRef;1
598;3;40866_16;STRING;;130_0_CrvNam;;1.000000;0.000000;;1
599;3;40874;U16;;130_0_ReadOnly;;1.000000;0.000000;;1
```

11. Adding a SunSpec Modbus TCP device manually

Adding an SMA Modbus TCP device requires the following steps:

- Connect the equipment to the concentrator using an Ethernet connection configured on the same sub-network (see SMA Modbus TCP connection part below)
- Go to the device page and click the "+"" button:

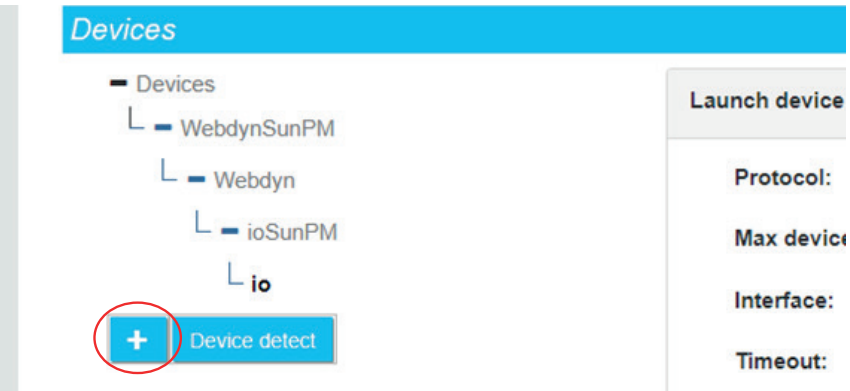

- The add device page is displayed:

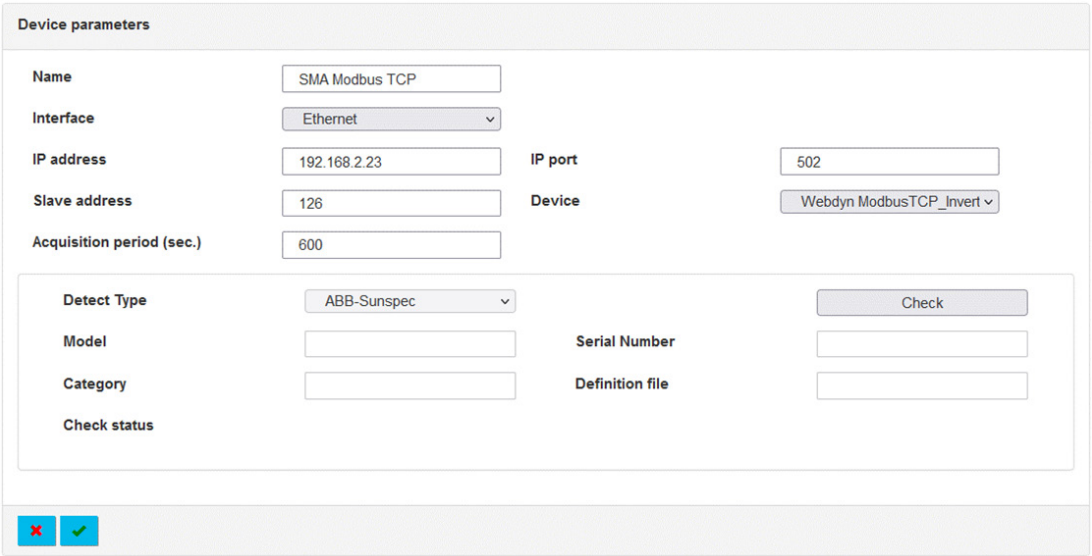

- Select the Ethernet interface.
- Fill in the following fields:
  - Name: free entry for the name of the inverter to be added
  - IP address: IP of the inverter to be added (see inverter manual)
  - IP port: inverter port number, default value: 502 (see inverter manual)
  - Slave address: inverter slave address between 3 and 125 (see inverter manual)
  - Acquisition period (sec): Required acquisition period to query the inverter
- Select the "Webdyn ModbusTCP_Inverter_SMA_speedwire_v1.csv" device

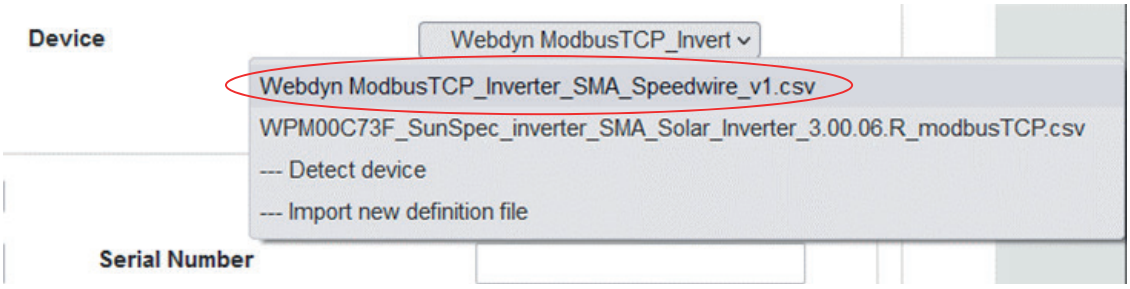

- Communication with the inverter can be tested by pressing the "Check" button
- Check the information and status:

- If the "Check status" is:

🟢	the inverter has been found and the current configuration is operational
🟠	The inverter has been found, but one or more variables in the definition file are not operational
🔴	the inverter has not been found or the current configuration is not operational

- Validate the addition of the device by clicking the checkbox at the bottom of the page:

12. SMA Modbus TCP definition file

SMA Modbus TCP protocol file names are composed as follows:

<uid>_ModbusTCP_<Manufacturer>_<Model>.csv

Where:

- <uid>: Concentrator identifier
- <Manufacturer>: is generated automatically from SMA Modbus protocol “Manufacturer” information
- < Model>: is generated automatically from the SMA Modbus protocol “Model” information

Definition file content:

Field	Description
Info1	Function code for the variable to be collected: this information is specific to the inverter and should therefore not be modified.
Info2	Register address to collect: this information is specific to the inverter and should not therefore be modified.

Field	Description
Info3	Variable Modbus format. The authorised formats are the following: • U8: 8-bit unsigned integer (1 byte) • U16: 16-bit unsigned integer (2 bytes, or 1 register) • U32: 32-bit unsigned integer (4 bytes, or 2 registers) • U64: 64-bit unsigned integer (8 bytes, or 4 registers) • I8: 8-bit signed integer (1 byte) • I16: 16-bit signed integer (2 bytes, or 1 register) • I32: 32-bit signed integer (4 bytes, or 2 registers) • I64: 64-bit signed integer (8 bytes, or 4 registers) • F32: 32-bit floating (4 bytes, or 2 registers) • F64: 64-bit floating (8 bytes, or 4 registers) • String: the variable is a character string. The "Address_Size" notation must then be used for the "Info2" field • Bits: the variable is of the bit field type. The "Address_1st bit_Number of bits" notation must then be used for the "Info2" field • IP: the variable is of the IP address V4 type and is therefore coded on 4 bytes (2 registers) • IPV6: the variable is of the IP address V6 type and is therefore coded on 16 bytes (8 registers) • MAC: the variable is of the MAC address type in "EUI48" format. It is therefore coded on 6 bytes (3 registers) Note that the integer types can be modified by adding a suffix. The authorised modifiers are: • _W: words are exchanged, i.e. the contents of the variable's registers are exchanged in blocks of 2 bytes • _B: bytes are exchanged, i.e. the contents of the variable's registers are exchanged at byte level, one by one • _WB: words AND bytes are exchanged. The 2 previous modifiers are applied. Thus, for example, the “I32_W” notation indicates that it is a variable of which bytes 1 and 2 will be exchanged with bytes 3 and 4. Similarly, the “U16_B” notation indicates that bytes 1 and 2 of the variable are exchanged. This is a “Little endian/Big endian” conversion
Info4	Not used

Example of a definition file for an SMA inverter in SMA Modbus TCP mode:

```
modbusTCP;Inverter;SMA;speedwire
1;3;30001;U32;;Version number of the SMA Modbus profile;;1.000000;0.000000;;4
2;3;30003;U32;;SUSy-ID;;1.000000;0.000000;;4
3;3;30005;U32;;Serial number;;1.000000;0.000000;;4
4;3;30007;U32;;Modbus data change;;1.000000;0.000000;;4
5;3;30051;U32;;Device class:;;1.000000;0.000000;;4
6;3;30053;U32;;Numerical identification of the device type;;1.000000;0.000000;;4
7;3;30055;U32;;Manufacturer specification;;1.000000;0.000000;;4
8;3;30057;U32;;Serial number_1;;1.000000;0.000000;;4
```

```
9;3;30059;U32;;Software package;;1.000000;0.000000;;4
10;3;30197;U32;;Number of the current event;;1.000000;0.000000;;4
11;3;30199;U32;;Time until grid connection attempt;;1.000000;0.000000;s;4
12;3;30201;U32;;Status of the device;;1.000000;0.000000;;4
13;3;30203;U32;;Displays the maximum active power for status
OK;;1.000000;0.000000;W;4
14;3;30205;U32;;Displays the maximum active power for status
Warning;;1.000000;0.000000;W;4
15;3;30207;U32;;Displays the maximum active power for status
Error;;1.000000;0.000000;W;4
16;3;30211;U32;;Recommended action;;1.000000;0.000000;;4
17;3;30213;U32;;Status message;;1.000000;0.000000;;4
18;3;30215;U32;;Status description;;1.000000;0.000000;;4
19;3;30217;U32;;Utility grid contactor;;1.000000;0.000000;;4
20;3;30219;U32;;Temperature derating;;1.000000;0.000000;;4
21;3;30225;U32;;Insulation resistance;;1.000000;0.000000;Ohms;4
22;3;30227;U32;;Status of key switch;;1.000000;0.000000;;4
23;3;30229;U32;;Local time of device;;1.000000;0.000000;;4
24;3;30231;U32;;Maximum possible permanent active power;;1.000000;0.000000;w;4
25;3;30233;U32;;Permanent active power limitation;;1.000000;0.000000;w;4
26;3;30235;U32;;Backup mode status;;1.000000;0.000000;;4
27;3;30237;U32;;Grid type:;;1.000000;0.000000;;4
28;3;30247;U32;;Current, complete event number;;1.000000;0.000000;;4
29;3;30249;U32;;Status of the GFDI relay:;;1.000000;0.000000;;4
30;3;30251;U32;;Status of current restart interlock;;1.000000;0.000000;;4
31;3;30257;U32;;State of DC switch;;1.000000;0.000000;;4
32;3;30267;U32;;DC switch_1;;1.000000;0.000000;;4
33;3;30269;U32;;DC switch_2;;1.000000;0.000000;;4
34;3;30271;U32;;DC switch_3;;1.000000;0.000000;;4
35;3;30273;U32;;DC switch_4;;1.000000;0.000000;;4
36;3;30275;U32;;DC switch_5;;1.000000;0.000000;;4
37;3;30277;U32;;DC switch_6;;1.000000;0.000000;;4
38;3;30279;U32;;DC switch_7;;1.000000;0.000000;;4
39;3;30281;U32;;DC switch_8;;1.000000;0.000000;;4
40;3;30283;U32;;DC switch_9;;1.000000;0.000000;;4
41;3;30285;U32;;DC switch_10;;1.000000;0.000000;;4
42;3;30287;U32;;DC switch_11;;1.000000;0.000000;;4
43;3;30289;U32;;DC switch_12;;1.000000;0.000000;;4
44;3;30291;U32;;DC switch_13;;1.000000;0.000000;;4
45;3;30293;U32;;DC switch_14;;1.000000;0.000000;;4
46;3;30295;U32;;DC switch_15;;1.000000;0.000000;;4
47;3;30297;U32;;DC switch_16;;1.000000;0.000000;;4
48;3;30299;U32;;DC switch_17;;1.000000;0.000000;;4
```

```
49;3;30301;U32;;DC switch_18;;1.000000;0.000000;;4
50;3;30303;U32;;DC switch_19;;1.000000;0.000000;;4
51;3;30305;U32;;DC switch_20;;1.000000;0.000000;;4
52;3;30307;U32;;DC switch_21;;1.000000;0.000000;;4
53;3;30309;U32;;DC switch_22;;1.000000;0.000000;;4
54;3;30311;U32;;DC switch_23;;1.000000;0.000000;;4
55;3;30313;U32;;DC switch_24;;1.000000;0.000000;;4
56;3;30315;U32;;DC switch_25;;1.000000;0.000000;;4
57;3;30317;U32;;DC switch_26;;1.000000;0.000000;;4
58;3;30319;U32;;DC switch_27;;1.000000;0.000000;;4
59;3;30321;U32;;DC switch_28;;1.000000;0.000000;;4
60;3;30323;U32;;DC switch_29;;1.000000;0.000000;;4
61;3;30325;U32;;DC switch_30;;1.000000;0.000000;;4
62;3;30327;U32;;DC switch_31;;1.000000;0.000000;;4
63;3;30329;U32;;DC switch_32;;1.000000;0.000000;;4
64;3;30331;U32;;Error message DC switch_1;;1.000000;0.000000;;4
65;3;30333;U32;;Error message DC switch_2;;1.000000;0.000000;;4
66;3;30335;U32;;Error message DC switch_3;;1.000000;0.000000;;4
67;3;30337;U32;;Error message DC switch_4;;1.000000;0.000000;;4
68;3;30339;U32;;Error message DC switch_5;;1.000000;0.000000;;4
69;3;30341;U32;;Error message DC switch_6;;1.000000;0.000000;;4
70;3;30343;U32;;Error message DC switch_7;;1.000000;0.000000;;4
71;3;30345;U32;;Error message DC switch_8;;1.000000;0.000000;;4
72;3;30347;U32;;Error message DC switch_9;;1.000000;0.000000;;4
73;3;30349;U32;;Error message DC switch_10;;1.000000;0.000000;;4
74;3;30351;U32;;Error message DC switch_11;;1.000000;0.000000;;4
75;3;30353;U32;;Error message DC switch_12;;1.000000;0.000000;;4
76;3;30355;U32;;Error message DC switch_13;;1.000000;0.000000;;4
77;3;30357;U32;;Error message DC switch_14;;1.000000;0.000000;;4
78;3;30359;U32;;Error message DC switch_15;;1.000000;0.000000;;4
79;3;30361;U32;;Error message DC switch_16;;1.000000;0.000000;;4
80;3;30363;U32;;Error message DC switch_17;;1.000000;0.000000;;4
81;3;30365;U32;;Error message DC switch_18;;1.000000;0.000000;;4
82;3;30367;U32;;Error message DC switch_19;;1.000000;0.000000;;4
83;3;30369;U32;;Error message DC switch_20;;1.000000;0.000000;;4
84;3;30371;U32;;Error message DC switch_21;;1.000000;0.000000;;4
85;3;30373;U32;;Error message DC switch_22;;1.000000;0.000000;;4
86;3;30375;U32;;Error message DC switch_23;;1.000000;0.000000;;4
87;3;30377;U32;;Error message DC switch_24;;1.000000;0.000000;;4
88;3;30379;U32;;Error message DC switch_25;;1.000000;0.000000;;4
89;3;30381;U32;;Error message DC switch_26;;1.000000;0.000000;;4
```

```
90;3;30383;U32;;Error message DC switch_27;;1.000000;0.000000;;4
91;3;30385;U32;;Error message DC switch_28;;1.000000;0.000000;;4
92;3;30387;U32;;Error message DC switch_29;;1.000000;0.000000;;4
93;3;30389;U32;;Error message DC switch_30;;1.000000;0.000000;;4
94;3;30391;U32;;Error message DC switch_31;;1.000000;0.000000;;4
95;3;30393;U32;;Error message DC switch_32;;1.000000;0.000000;;4
96;3;30513;U32;;Total AC energy fed in on all line conductors (total
yield);;1.000000;0.000000;Wh;4
97;3;30515;U32;;Total AC energy fed in on all line conductors (total yield)-
2;;1.000000;0.000000;wh;4
98;3;30517;U32;;Energy fed in on the current day on all line conductors (daily
yield) ;;1.000000;0.000000;Wh;4
99;3;30519;U32;;Energy fed in on the current day on all line conductors (daily
yield)_2;;1.000000;0.000000;Wh;4
100;3;30521;U32;;Operating time;;1.000000;0.000000;s;4
101;3;30523;U32;;Operating time-2;;1.000000;0.000000;s;4
102;3;30525;U32;;Feed-in time;;1.000000;0.000000;s;4
103;3;30527;U32;;Feed-in time-2;;1.000000;0.000000;s;4
104;3;30529;U32;;Total AC energy fed in on all line
conductors_1;;1.000000;0.000000;Wh;4
105;3;30531;U32;;Total AC energy fed in on all line
conductors_2;;1.000000;0.000000;kWh;4
106;3;30533;U32;;Total AC energy fed in on all line
conductors_3;;1.000000;0.000000;MWh;4
107;3;30535;U32;;Energy fed in on the current day on all line
conductors_1;;1.000000;0.000000;Wh;4
108;3;30537;U32;;Energy fed in on the current day on all line
conductors_2;;1.000000;0.000000;kWh;4
109;3;30539;U32;;Energy fed in on the current day on all line
conductors_3;;1.000000;0.000000;MWh;4
110;3;30541;U32;;Operating time-3;;1.000000;0.000000;s;4
111;3;30543;U32;;Feed-in time-3;;1.000000;0.000000;s;4
112;3;30545;U32;;Operating time of interior fan-1;;1.000000;0.000000;s;4
113;3;30547;U32;;Operating time of interior fan-2;;1.000000;0.000000;s;4
114;3;30549;U32;;Operating time of heat sink fan;;1.000000;0.000000;s;4
115;3;30559;U32;;Number of events at user level;;1.000000;0.000000;;4
116;3;30561;U32;;Number of events at installer level;;1.000000;0.000000;;4
117;3;30563;U32;;Number of events at service level ;;1.000000;0.000000;;4
118;3;30565;U32;;Number of generator starts ;;1.000000;0.000000;;4
119;3;30567;U32;;Meter for battery charging ampere-hours;;1.000000;0.000000;Ah;4
120;3;30569;U32;;Meter for battery discharging in ampere-
hours;;1.000000;0.000000;Ah;4
121;3;30571;U32;;Meter reading consumption meter;;1.000000;0.000000;Wh;4
122;3;30573;U32;;Operating time of generator;;1.000000;0.000000;s;4
123;3;30575;U32;;Released energy from generator;;1.000000;0.000000;Wh;4
124;3;30577;U32;;Purchased electricity today;;1.000000;0.000000;Wh;4
125;3;30579;U32;;Feed-in today;;1.000000;0.000000;Wh;4
126;3;30581;U32;;Meter reading purchased electricity meter;;1.000000;0.000000;Wh;4
```

```
127;3;30583;U32;;Meter reading of grid feed-in meter;;1.000000;0.000000;Wh;4
128;3;30585;U32;;Power outage time;;1.000000;0.000000;s;4
129;3;30587;U32;;Meter reading PV production meter;;1.000000;0.000000;Wh;4
130;3;30589;U32;;Total increased self-consumption;;1.000000;0.000000;Wh;4
131;3;30591;U32;;Increased self-consumption today;;1.000000;0.000000;Wh;4
132;3;30593;U32;;Total energy consumed internally;;1.000000;0.000000;Wh;4
133;3;30595;U32;;Consumed energy;;1.000000;0.000000;Wh;4
134;3;30597;U32;;Fed energy;;1.000000;0.000000;Wh;4
135;3;30599;U32;;Number of grid connections  ;;1.000000;0.000000;;4
136;3;30601;U32;;Operating time of interior fan 3;;1.000000;0.000000;s;4
137;3;30769;I32;;DC current input 1;;1.000000;0.000000;A;4
138;3;30771;I32;;DC voltage input 1;;1.000000;0.000000;V;4
139;3;30773;I32;;DC power input 1;;1.000000;0.000000;W;4
140;3;30775;I32;;Active power on all line conductors;;1.000000;0.000000;W;4
141;3;30777;I32;;Active power of line conductor L1;;1.000000;0.000000;W;4
142;3;30779;I32;;Active power of line conductor L2;;1.000000;0.000000;W;4
143;3;30781;I32;;Active power of line conductor L3;;1.000000;0.000000;W;4
144;3;30783;U32;;Line voltage, line conductor L1 to N;;1.000000;0.000000;V;4
145;3;30785;U32;;Line voltage, line conductor L2 to N;;1.000000;0.000000;V;4
146;3;30787;U32;;Line voltage, line conductor L3 to N;;1.000000;0.000000;V;4
147;3;30789;U32;;Line voltage, line conductor L1 to L2 ;;1.000000;0.000000;V;4
148;3;30791;U32;;Line voltage, line conductor L2 to L3;;1.000000;0.000000;V;4
149;3;30793;U32;;Line voltage, line conductor L3 to L1;;1.000000;0.000000;V;4
150;3;30795;U32;;Line current on all line conductors;;1.000000;0.000000;A;4
151;3;30797;U32;;Line current of line conductor L1;;1.000000;0.000000;A;4
152;3;30799;U32;;Line current of line conductor L2;;1.000000;0.000000;A;4
153;3;30801;U32;;Line current of line conductor L3;;1.000000;0.000000;A;4
154;3;30803;U32;;Power frequency;;1.000000;0.000000;Hz;4
155;3;30805;I32;;Reactive power on all line conductors;;1.000000;0.000000;VAr;4
156;3;30807;I32;;Reactive power of line conductor L1;;1.000000;0.000000;VAr;4
157;3;30809;I32;;Reactive power of line conductor L2;;1.000000;0.000000;VAr;4
158;3;30811;I32;;Reactive power of line conductor L3;;1.000000;0.000000;VAr;4
159;3;30813;I32;;Apparent power on all line conductors;;1.000000;0.000000;VA;4
160;3;30815;I32;;Apparent power of line conductor L1;;1.000000;0.000000;VA;4
161;3;30817;I32;;Apparent power of line conductor L2;;1.000000;0.000000;VA;4
162;3;30819;I32;;Apparent power of line conductor L3;;1.000000;0.000000;VA;4
163;3;30821;U32;;Total displacement power factor of all line
conductors;;1.000000;0.000000;;4
164;3;30823;U32;;Excitation type of cos;;1.000000;0.000000;;4
165;3;30843;I32;;Battery current;;1.000000;0.000000;A;4
166;3;30845;U32;;Current battery state of charge;;1.000000;0.000000;%;4
167;3;30847;U32;;Current battery capacity;;1.000000;0.000000;%;4
```

```
168;3;30849;I32;;Battery temperature;;1.000000;0.000000;°C;4
169;3;30851;U32;;Battery voltage;;1.000000;0.000000;V;4
170;3;30853;U32;;Active battery charging mode;;1.000000;0.000000;;4
171;3;30855;U32;;Current battery charging voltage setpoint;;1.000000;0.000000;V;4
172;3;30857;I32;;Number of battery charge throughputs ;;1.000000;0.000000;;4
173;3;30859;U32;;Battery maintenance charge status;;1.000000;0.000000;;4
174;3;30861;I32;;Load power;;1.000000;0.000000;W;4
175;3;30863;U32;;Current PV array power;;1.000000;0.000000;W;4
176;3;30865;I32;;Power purchased electricity;;1.000000;0.000000;W;4
177;3;30867;I32;;Power grid feed-in;;1.000000;0.000000;W;4
178;3;30869;I32;;Power PV generation;;1.000000;0.000000;W;4
179;3;30871;U32;;Current self-consumption;;1.000000;0.000000;W;4
180;3;30873;I32;;Current increased self-consumption;;1.000000;0.000000;W;4
181;3;30875;U32;;Multifunction relay status;;1.000000;0.000000;;4
182;3;30877;U32;;Electricity supply status;;1.000000;0.000000;;4
183;3;30879;U32;;Reason for requesting generator;;1.000000;0.000000;;4
184;3;30881;U32;;PV system utility grid connection;;1.000000;0.000000;;4
185;3;30883;U32;;Status of utility grid;;1.000000;0.000000;;4
186;3;30885;U32;;Power of external grid connection (W);;1.000000;0.000000;W;4
187;3;30887;U32;;Power of external grid connection line conductor
L1;;1.000000;0.000000;W;4
188;3;30889;U32;;Power of external grid connection line conductor
L2;;1.000000;0.000000;W;4
189;3;30891;U32;;Power of external grid connection line conductor
L3;;1.000000;0.000000;W;4
190;3;30893;U32;;Reactive power of external grid connection;;1.000000;0.000000;Var;4
191;3;30895;U32;;Reactive power of external grid connection line conductor
L1;;1.000000;0.000000;Var;4
192;3;30897;U32;;Reactive power of external grid connection line conductor
L2;;1.000000;0.000000;Var;4
193;3;30899;U32;;Reactive power of external grid connection line conductor
L3;;1.000000;0.000000;Var;4
194;3;30901;U32;;Power frequency of external grid connection;;0.000000;0.000000;Hz;4
195;3;30903;U32;;Voltage of external grid connection line conductor
L1;;1.000000;0.000000;V;4
196;3;30905;U32;;Voltage of external grid connection line conductor
L2;;1.000000;0.000000;V;4
197;3;30907;U32;;Voltage of external grid connection line conductor
L3;;1.000000;0.000000;V;4
198;3;30909;I32;;Current external grid connection line conductor
L1;;1.000000;0.000000;A;4
199;3;30911;I32;;Current external grid connection line conductor
L2;;1.000000;0.000000;A;4
200;3;30913;I32;;Current external grid connection line conductor
L3;;1.000000;0.000000;A;4
201;3;30915;U32;;Electricity supply status_1;;1.000000;0.000000;;4
202;3;30917;U32;;Generator status;;1.000000;0.000000;;4
203;3;30925;U32;;Data transfer rate of network terminal A;;1.000000;0.000000;;4
```

```
204;3;30927;U32;;Duplex mode of network terminal A;;1.000000;0.000000;;4
205;3;30929;U32;;Speedwire connection status of network terminal
A;;1.000000;0.000000;;4
206;3;30931;U32;;Data transfer rate of network terminal B;;1.000000;0.000000;;4
207;3;30933;U32;;Duplex mode of network terminal B;;1.000000;0.000000;;4
208;3;30935;U32;;Speedwire connection status of network terminal
B;;1.000000;0.000000;;4
209;3;30937;U32;;Data transfer rate of network terminal C;;1.000000;0.000000;;4
210;3;30939;U32;;Duplex mode of network terminal C;;1.000000;0.000000;;4
211;3;30941;U32;;Speedwire connection status of network terminal
C;;1.000000;0.000000;;4
212;3;30943;U32;;Data transfer rate of network terminal D;;1.000000;0.000000;;4
213;3;30945;U32;;Duplex mode of network terminal D;;1.000000;0.000000;;4
214;3;30947;U32;;Speedwire connection status of network terminal
D;;1.000000;0.000000;;4
215;3;30949;U32;;Displacement power factor;;1.000000;0.000000;;4
216;3;30951;I32;;DC power without battery;;1.000000;0.000000;W;4
217;3;30953;I32;;Internal temperature;;1.000000;0.000000;°C;4
218;3;30955;U32;;Operating status of battery;;1.000000;0.000000;;4
219;3;30957;I32;;DC current input 2;;0.000100;0.000000;A;4
220;3;30959;I32;;DC voltage input 2;;0.010000;0.000000;V;4
221;3;30961;I32;;DC power input 2;;1.000000;0.000000;W;4
222;3;30963;I32;;DC current input 3;;0.001000;0.000000;A;4
223;3;30965;I32;;DC voltage input 3;;0.010000;0.000000;V;4
224;3;30967;I32;;DC power input 3;;1.000000;0.000000;W;4
225;3;30969;I32;;DC current input 4;;0.001000;0.000000;A;4
226;3;30971;I32;;DC voltage input 4;;0.010000;0.000000;V;4
227;3;30973;I32;;DC power input 4;;0.100000;0.000000;W;4
228;3;30975;I32;;DC link voltage;;0.010000;0.000000;V;4
229;3;30977;I32;;Line current of line conductor L1_1;;0.000100;0.000000;A;4
230;3;30979;I32;;Line current of line conductor L2_1;;0.000100;0.000000;A;4
231;3;30981;I32;;Line current of line conductor L3_1;;0.000100;0.000000;A;4
232;3;30983;U32;;PV power;;1.000000;0.000000;W;4
233;3;30985;I32;;Total current at the external grid
connection;;0.000100;0.000000;A;4
234;3;30987;U32;;Error battery state of charge;;0.000000;0.000000;%;4
235;3;30989;U32;;Maximum occurring battery current in charge
direction;;0.000100;0.000000;A;4
236;3;30991;U32;;Maximum occurring battery current in discharge
direction;;0.000100;0.000000;A;4
237;3;30993;U32;;Charge factor: Ratio battery charging/-dischargi
ng;;0.000100;0.000000;;4
238;3;30995;U32;;Runtime of the battery statistic meter;;1.000000;0.000000;s;4
239;3;30997;I32;;Lowest measured battery temperature;;1.000000;0.000000;°C;4
240;3;30999;I32;;Highest measured battery temperature;;1.000000;0.000000;°C;4
241;3;31001;U32;;Maximum occurring battery voltage;;0.010000;0.000000;V;4
```

```
242;3;31003;U32;;Remaining time until full charge;;1.000000;0.000000;s;4
243;3;31005;U32;;Remaining time until equalization charge;;0.100000;0.000000;s;4
244;3;31007;U32;;Remaining absorption time of the current battery charge
phase;;1.000000;0.000000;s;4
245;3;31009;U32;;Lower discharge limit for self-consumption
range;;1.000000;0.000000;%;4
246;3;31011;U32;;Total output current of the solar charge
controller;;0.000100;0.000000;A;4
247;3;31013;U32;;Remaining minimum run time of the generator;;1.000000;0.000000;s;4
248;3;31015;U32;;Operating state of the master in a multicluster(line conductor
L1):;;1.000000;0.000000;;4
249;3;31017;8;STRING;;Current Speedwire IP address, in the format XXX.XXX.XXX.
XXX;;1.000000;0.000000;;4
250;3;31025;8;STRING;;Current Speedwire subnet mask, in the format XXX.XXX.XXX.
XXX;;1.000000;0.000000;;4
251;3;31033;8;STRING;;Current Speedwire gateway address, in the format XXX.XXX.XXX.
XXX;;1.000000;0.000000;;4
252;3;31041;8;STRING;;Current Speedwire DNS server address, in the format XXX.XXX.
XXX.XXX;;1.000000;0.000000;;4
253;3;31053;U32;;Operating state of the slave 1 in a multicluster (line conductor
L2):;;1.000000;0.000000;;4
254;3;31055;U32;;Operating state of the slave 2 in a multicluster (line conductor
L3):;;1.000000;0.000000;;4
255;3;31057;U32;;Status battery use range:;;1.000000;0.000000;;4
256;3;31059;U32;;Absorption phase active:;;1.000000;0.000000;;4
257;3;31061;U32;;Battery charging control via communication
available:;;1.000000;0.000000;;4
258;3;31063;U32;;Total PV energy;;1.000000;0.000000;Wh;4
259;3;31065;U32;;Total PV energy today;;1.000000;0.000000;Wh;4
260;3;31067;U32;;Number of equalization charges of the battery;;1.000000;0.000000;;4
261;3;31069;U32;;Number of full charges of the battery  ;;1.000000;0.000000;;4
262;3;31071;U32;;Relative battery discharging since the last full
charge;;1.000000;0.000000;%;4
263;3;31073;U32;;Relative battery discharging since the last equalization
charge;;1.000000;0.000000;%;4
264;3;31075;U32;;Energy meter run time;;1.000000;0.000000;s;4
265;3;31077;U32;;PV energy at solar charge controller 1;;1.000000;0.000000;Wh;4
266;3;31079;U32;;PV energy at solar charge controller 2;;1.000000;0.000000;Wh;4
267;3;31081;U32;;PV energy at solar charge controller 3;;1.000000;0.000000;Wh;4
268;3;31083;U32;;PV energy at solar charge controller 4;;1.000000;0.000000;Wh;4
269;3;31085;U32;;Nominal power in OK mode;;1.000000;0.000000;W;4
270;3;31091;U32;;PV energy produced (today);;1.000000;0.000000;Wh;4
271;3;31093;U32;;PV energy produced (yesterday);;1.000000;0.000000;Wh;4
272;3;31095;U32;;PV energy produced (current month);;1.000000;0.000000;Wh;4
273;3;31097;U32;;PV energy produced (previous month);;1.000000;0.000000;Wh;4
274;3;31099;U32;;Generator energy produced (today);;1.000000;0.000000;Wh;4
275;3;31101;U32;;Generator energy produced (yesterday);;1.000000;0.000000;Wh;4
276;3;31103;U32;;Generator energy produced (current month);;1.000000;0.000000;Wh;4
277;3;31105;U32;;Generator energy produced (previous month);;1.000000;0.000000;Wh;4
```

```
278;3;31107;U32;;Grid feed-in today;;1.000000;0.000000;Wh;4
279;3;31109;U32;;Energy fed into the utility grid
(yesterday);;1.000000;0.000000;Wh;4
280;3;31111;U32;;Energy fed into the utility grid (current
month);;1.000000;0.000000;Wh;4
281;3;31113;U32;;Energy fed into the utility grid (previous
month);;1.000000;0.000000;Wh;4
282;3;31115;U32;;Energy drawn from the utility grid
(yesterday);;1.000000;0.000000;Wh;4
283;3;31117;U32;;Energy drawn from the utility grid (current
month);;1.000000;0.000000;Wh;4
284;3;31119;U32;;Energy drawn from the utility grid (previous
month);;1.000000;0.000000;Wh;4
285;3;31121;U32;;Consumed energy (today);;1.000000;0.000000;Wh;4
286;3;31123;U32;;Consumed energy (yesterday);;1.000000;0.000000;Wh;4
287;3;31125;U32;;Consumed energy (current month);;1.000000;0.000000;Wh;4
288;3;31127;U32;;Consumed energy (previous month);;1.000000;0.000000;Wh;4
289;3;31129;U32;;Unused PV power;;1.000000;0.000000;W;4
290;3;31131;I32;;Available PV power;;1.000000;0.000000;W;4
291;3;31133;I32;;Internal PV power limitation;;1.000000;0.000000;W;4
292;3;31135;I32;;Reactive power of the load;;1.000000;0.000000;VAr;4
293;3;31137;I32;;Maximum short-term power reduction;;1.000000;0.000000;W;4
294;3;31139;I32;;Current PV reactive power fed;;1.000000;0.000000;VAr;4
295;3;31141;I32;;Current PV apparent power fed;;1.000000;0.000000;VAr;4
296;3;31143;I32;;Monitoring value return ;;1.000000;0.000000;;4
297;3;31159;I32;;Current setpoint Reactive power Q;;1.000000;0.000000;;4
298;3;31221;I32;;EEI displacement power factor  ;;0.000100;0.000000;;4
299;3;31247;I32;;Operating state Residual current;;0.000100;0.000000;A;4
300;3;31253;U32;;Line voltage PCC Line conductor L1;;0.010000;0.000000;V;4
301;3;31255;U32;;Line voltage PCC Line conductor L2;;0.010000;0.000000;V;4
302;3;31257;U32;;Line voltage PCC Line conductor L3;;0.010000;0.000000;V;4
303;3;31259;U32;;Power Grid feed-in Line conductor L1;;1.000000;0.000000;W;4
304;3;31261;U32;;Power Grid feed-in Line conductor L2;;1.000000;0.000000;W;4
305;3;31263;U32;;Power Grid feed-in Line conductor L3;;1.000000;0.000000;W;4
306;3;31265;U32;;Power Purchased electricity Line conductor
L1;;1.000000;0.000000;W;4
307;3;31267;U32;;Power Purchased electricity Line conductor
L2;;1.000000;0.000000;W;4
308;3;31269;U32;;Power Purchased electricity Line conductor
L3;;1.000000;0.000000;W;4
309;3;31271;I32;;Reactive power Grid feed-in Line conductor
L1;;1.000000;0.000000;VAr;4
310;3;31273;I32;;Reactive power Grid feed-in Line conductor
L2;;1.000000;0.000000;VAr;4
311;3;31275;I32;;Reactive power Grid feed-in Line conductor
L3;;1.000000;0.000000;VAr;4
312;3;31277;I32;;Reactive power Grid feed-in;;1.000000;0.000000;VAr;4
313;3;31281;I32;;DC voltage, inputs 1;;0.010000;0.000000;V;4
```

```
314;3;31283;I32;;DC current, inputs 1;;0.000100;0.000000;A;4
315;3;31285;I32;;DC power, inputs 1;;1.000000;0.000000;W;4
316;3;31287;I32;;DC voltage, inputs 2;;0.010000;0.000000;V;4
317;3;31289;I32;;DC current, inputs 2;;0.000100;0.000000;A;4
318;3;31291;I32;;DC power, inputs 2;;1.000000;0.000000;W;4
319;3;31293;I32;;DC voltage, inputs 3;;0.010000;0.000000;V;4
320;3;31295;I32;;DC current, inputs 3;;0.000100;0.000000;A;4
321;3;31297;I32;;DC power, inputs 3;;1.000000;0.000000;W;4
322;3;31299;I32;;DC voltage, inputs 4;;0.010000;0.000000;V;4
323;3;31301;I32;;DC current, inputs 4;;0.000100;0.000000;A;4
324;3;31303;I32;;DC power, inputs 4;;1.000000;0.000000;W;4
325;3;31305;I32;;DC voltage, inputs 5;;0.010000;0.000000;V;4
326;3;31307;I32;;DC current, inputs 5;;0.000100;0.000000;A;4
327;3;31309;I32;;DC power, inputs 5;;1.000000;0.000000;W;4
328;3;31311;I32;;DC voltage, inputs 6;;0.010000;0.000000;V;4
329;3;31313;I32;;DC current, inputs 6;;0.000100;0.000000;A;4
330;3;31315;I32;;DC power, inputs 6;;1.000000;0.000000;W;4
331;3;31317;I32;;DC voltage, inputs 7;;0.010000;0.000000;V;4
332;3;31319;I32;;DC current, inputs 7;;0.000100;0.000000;A;4
333;3;31321;I32;;DC power, inputs 7;;1.000000;0.000000;W;4
334;3;31323;I32;;DC voltage, inputs 8;;0.010000;0.000000;V;4
335;3;31325;I32;;DC current, inputs 8;;0.000100;0.000000;A;4
336;3;31327;I32;;DC power, inputs 8;;1.000000;0.000000;W;4
337;3;31329;I32;;DC voltage, inputs 9;;0.010000;0.000000;V;4
338;3;31331;I32;;DC current, inputs 9;;0.000100;0.000000;A;4
339;3;31333;I32;;DC power, inputs 9;;1.000000;0.000000;W;4
340;3;31335;I32;;DC voltage, inputs 10;;0.010000;0.000000;V;4
341;3;31337;I32;;DC current, inputs 10;;0.000100;0.000000;A;4
342;3;31339;I32;;DC power, inputs 10;;1.000000;0.000000;W;4
343;3;31341;I32;;DC voltage, inputs 11;;0.010000;0.000000;V;4
344;3;31343;I32;;DC current, inputs 11;;0.000100;0.000000;A;4
345;3;31345;I32;;DC power, inputs 11;;1.000000;0.000000;W;4
346;3;31347;I32;;DC voltage, inputs 12;;0.010000;0.000000;V;4
347;3;31349;I32;;DC current, inputs 12;;0.000100;0.000000;A;4
348;3;31351;I32;;DC power, inputs 12;;1.000000;0.000000;W;4
349;3;31353;I32;;DC voltage, inputs 13;;0.010000;0.000000;V;4
350;3;31355;I32;;DC current, inputs 13;;0.000100;0.000000;A;4
351;3;31357;I32;;DC power, inputs 13;;1.000000;0.000000;W;4
352;3;31359;I32;;DC voltage, inputs 14;;0.010000;0.000000;V;4
353;3;31361;I32;;DC current, inputs 14;;1.000000;0.000000;A;4
354;3;31363;I32;;DC power, inputs 14;;1.000000;0.000000;W;4
```

```
355;3;31365;I32;;DC voltage, inputs 15;;0.000000;0.000000;V;4
356;3;31367;I32;;DC current, inputs 15;;1.000000;0.000000;A;4
357;3;31369;I32;;DC power, inputs 15;;1.000000;0.000000;W;4
358;3;31371;I32;;DC voltage, inputs 16;;0.010000;0.000000;V;4
359;3;31373;I32;;DC current, inputs 16;;0.010000;0.000000;A;4
360;3;31375;I32;;DC power, inputs 16;;1.000000;0.000000;W;4
361;3;31377;U32;;Battery manufacturer;;1.000000;0.000000;;4
362;3;31379;U32;;Type of battery management system;;1.000000;0.000000;;4
363;3;31381;8;STRING;;Serial number of battery management system;;1.000000;0.000000;;4
364;3;31389;U32;;Firmware version of battery management system ;;1.000000;0.000000;;4
365;3;31391;U32;;Current state of the battery part (without inverter part);;1.000000;0.000000;;4
366;3;31393;U32;;Battery charging: current battery state of charge;;1.000000;0.000000;W;4
367;3;31395;U32;;Battery discharging: current battery state of charge;;1.000000;0.000000;W;4
368;3;31397;U32;;Battery state of charge;;1.000000;0.000000;Wh;4
369;3;31399;U32;;Battery state of charge-2;;1.000000;0.000000;Wh;4
370;3;31401;U32;;Battery state of discharge;;1.000000;0.000000;Wh;4
371;3;31403;U32;;Battery state of discharge-2;;1.000000;0.000000;Wh;4
372;3;31791;U32;;Number of DC current measurement units  ;;1.000000;0.000000;;4
373;3;31793;I32;;String current of strings 1;;0.000100;0.000000;A;4
374;3;31795;I32;;String current of strings 2;;0.000100;0.000000;A;4
375;3;31797;I32;;String current of strings 3;;0.000100;0.000000;A;4
376;3;31799;I32;;String current of strings 4;;0.000100;0.000000;A;4
377;3;31801;I32;;String current of strings 5;;0.000100;0.000000;A;4
378;3;31803;I32;;String current of strings 6;;0.000100;0.000000;A;4
379;3;31805;I32;;String current of strings 7;;0.000100;0.000000;A;4
380;3;31807;I32;;String current of strings 8;;0.000100;0.000000;A;4
381;3;31809;I32;;String current of strings 9;;0.000100;0.000000;A;4
382;3;31811;I32;;String current of strings 10;;0.000100;0.000000;A;4
383;3;31813;I32;;String current of strings 11;;0.000100;0.000000;A;4
384;3;31815;I32;;String current of strings 12;;0.000100;0.000000;A;4
385;3;31817;I32;;String current of strings 13;;0.000100;0.000000;A;4
386;3;31819;I32;;String current of strings 14;;0.000100;0.000000;A;4
387;3;31821;I32;;String current of strings 15;;0.000100;0.000000;A;4
388;3;31823;I32;;String current of strings 16;;0.000100;0.000000;A;4
389;3;31825;I32;;String current of strings 17;;0.000100;0.000000;A;4
390;3;31827;I32;;String current of strings 18;;0.000100;0.000000;A;4
391;3;31829;I32;;String current of strings 19;;0.000100;0.000000;A;4
392;3;31831;I32;;String current of strings 20;;0.000100;0.000000;A;4
393;3;31833;I32;;String current of strings 21;;0.000100;0.000000;A;4
```

```
394;3;31835;I32;;String current of strings 22;;0.000100;0.000000;A;4
395;3;31837;I32;;String current of strings 23;;0.000100;0.000000;A;4
396;3;31839;I32;;String current of strings 24;;0.000100;0.000000;A;4
397;3;31841;I32;;String current of strings 25;;0.000100;0.000000;A;4
398;3;31843;I32;;String current of strings 26;;0.000100;0.000000;A;4
399;3;31845;I32;;String current of strings 27;;0.000100;0.000000;A;4
400;3;31847;I32;;String current of strings 28;;0.000100;0.000000;A;4
401;3;31849;I32;;String current of strings 29;;0.000100;0.000000;A;4
402;3;31851;I32;;String current of strings 30;;0.000100;0.000000;A;4
403;3;31853;I32;;String current of strings 31;;0.000100;0.000000;A;4
404;3;31855;I32;;String current of strings 32;;0.000100;0.000000;A;4
405;3;31857;I32;;String current of strings 33;;0.000100;0.000000;A;4
406;3;31859;I32;;String current of strings 34;;0.000100;0.000000;A;4
407;3;31861;I32;;String current of strings 35;;0.000100;0.000000;A;4
408;3;31863;I32;;String current of strings 36;;0.000100;0.000000;A;4
409;3;31865;I32;;String current of strings 37;;0.000100;0.000000;A;4
410;3;31867;I32;;String current of strings 38;;0.000100;0.000000;A;4
411;3;31869;I32;;String current of strings 39;;0.000100;0.000000;A;4
412;3;31871;I32;;String current of strings 40;;0.000100;0.000000;A;4
413;3;31873;I32;;String current of strings 41;;0.000100;0.000000;A;4
414;3;31875;I32;;String current of strings 42;;0.000100;0.000000;A;4
415;3;31877;I32;;String current of strings 43;;0.000100;0.000000;A;4
416;3;31879;I32;;String current of strings 44;;0.000100;0.000000;A;4
417;3;31881;I32;;String current of strings 45;;0.000100;0.000000;A;4
418;3;31883;I32;;String current of strings 46;;0.000100;0.000000;A;4
419;3;31885;I32;;String current of strings 47;;0.000100;0.000000;A;4
420;3;31887;I32;;String current of strings 48;;0.000100;0.000000;A;4
421;3;31889;I32;;String current of strings 49;;0.000100;0.000000;A;4
422;3;31891;I32;;String current of strings 50;;0.000100;0.000000;A;4
423;3;31893;I32;;String current of strings 51;;0.000100;0.000000;A;4
424;3;31895;I32;;String current of strings 52;;0.000100;0.000000;A;4
425;3;31897;I32;;String current of strings 53;;0.000100;0.000000;A;4
426;3;31899;I32;;String current of strings 54;;0.000100;0.000000;A;4
427;3;31901;I32;;String current of strings 55;;0.000100;0.000000;A;4
428;3;31903;I32;;String current of strings 56;;0.000100;0.000000;A;4
429;3;31905;I32;;String current of strings 57;;0.000100;0.000000;A;4
430;3;31907;I32;;String current of strings 58;;0.000100;0.000000;A;4
431;3;31909;I32;;String current of strings 59;;0.000100;0.000000;A;4
432;3;31911;I32;;String current of strings 60;;0.000100;0.000000;A;4
433;3;31913;I32;;String current of strings 61;;0.000100;0.000000;A;4
434;3;31915;I32;;String current of strings 62;;0.000100;0.000000;A;4
```

```
435;3;31917;I32;;String current of strings 63;;0.000100;0.000000;A;4
436;3;31919;I32;;String current of strings 64;;0.000100;0.000000;A;4
437;3;31921;I32;;String current of strings 65;;0.000100;0.000000;A;4
438;3;31923;I32;;String current of strings 66;;0.000100;0.000000;A;4
439;3;31925;I32;;String current of strings 67;;0.000100;0.000000;A;4
440;3;31927;I32;;String current of strings 68;;0.000100;0.000000;A;4
441;3;31929;I32;;String current of strings 69;;0.000100;0.000000;A;4
442;3;31931;I32;;String current of strings 70;;0.000100;0.000000;A;4
443;3;31933;I32;;String current of strings 71;;0.000100;0.000000;A;4
444;3;31935;I32;;String current of strings 72;;0.000100;0.000000;A;4
445;3;31937;I32;;String current of strings 73;;0.000100;0.000000;A;4
446;3;31939;I32;;String current of strings 74;;0.000100;0.000000;A;4
447;3;31941;I32;;String current of strings 75;;0.000100;0.000000;A;4
448;3;31943;I32;;String current of strings 76;;0.000100;0.000000;A;4
449;3;31945;I32;;String current of strings 77;;0.000100;0.000000;A;4
450;3;31947;I32;;String current of strings 78;;0.000100;0.000000;A;4
451;3;31949;I32;;String current of strings 79;;0.000100;0.000000;A;4
452;3;31951;I32;;String current of strings 80;;0.000100;0.000000;A;4
453;3;31953;I32;;String current of strings 81;;0.000100;0.000000;A;4
454;3;31955;I32;;String current of strings 82;;0.000100;0.000000;A;4
455;3;31957;I32;;String current of strings 83;;0.000100;0.000000;A;4
456;3;31959;I32;;String current of strings 84;;0.000100;0.000000;A;4
457;3;31961;I32;;String current of strings 85;;0.000100;0.000000;A;4
458;3;31963;I32;;String current of strings 86;;0.000100;0.000000;A;4
459;3;31965;I32;;String current of strings 87;;0.000100;0.000000;A;4
460;3;31967;I32;;String current of strings 88;;0.000100;0.000000;A;4
461;3;31969;I32;;String current of strings 89;;0.000100;0.000000;A;4
462;3;31971;I32;;String current of strings 90;;0.000100;0.000000;A;4
463;3;31973;I32;;String current of strings 91;;0.000100;0.000000;A;4
464;3;31975;I32;;String current of strings 92;;0.000100;0.000000;A;4
465;3;31977;I32;;String current of strings 93;;0.000100;0.000000;A;4
466;3;31979;I32;;String current of strings 94;;0.000100;0.000000;A;4
467;3;31981;I32;;String current of strings 95;;0.000100;0.000000;A;4
468;3;31983;I32;;String current of strings 96;;0.000100;0.000000;A;4
469;3;31985;I32;;String current of strings 97;;0.000100;0.000000;A;4
470;3;31987;I32;;String current of strings 98;;0.000100;0.000000;A;4
471;3;31989;I32;;String current of strings 99;;0.000100;0.000000;A;4
472;3;31991;I32;;String current of strings 100;;0.000100;0.000000;A;4
473;3;31993;I32;;String current of strings 101;;0.000100;0.000000;A;4
474;3;31995;I32;;String current of strings 102;;0.000100;0.000000;A;4
475;3;31997;I32;;String current of strings 103;;0.000100;0.000000;A;4
```

```
476;3;31999;I32;;String current of strings 104;;0.000100;0.000000;A;4
477;3;32001;I32;;String current of strings 105;;0.000100;0.000000;A;4
478;3;32003;I32;;String current of strings 106;;0.000100;0.000000;A;4
479;3;32005;I32;;String current of strings 107;;0.000100;0.000000;A;4
480;3;32007;I32;;String current of strings 108;;0.000100;0.000000;A;4
481;3;32009;I32;;String current of strings 109;;0.000100;0.000000;A;4
482;3;32011;I32;;String current of strings 110;;0.000100;0.000000;A;4
483;3;32013;I32;;String current of strings 111;;0.000100;0.000000;A;4
484;3;32015;I32;;String current of strings 112;;0.000100;0.000000;A;4
485;3;32017;I32;;String current of strings 113;;0.000100;0.000000;A;4
486;3;32019;I32;;String current of strings 114;;0.000100;0.000000;A;4
487;3;32021;I32;;String current of strings 115;;0.000100;0.000000;A;4
488;3;32023;I32;;String current of strings 116;;0.000100;0.000000;A;4
489;3;32025;I32;;String current of strings 117;;0.000100;0.000000;A;4
490;3;32027;I32;;String current of strings 118;;0.000100;0.000000;A;4
491;3;32029;I32;;String current of strings 119;;0.000100;0.000000;A;4
492;3;32031;I32;;String current of strings 120;;0.000100;0.000000;A;4
493;3;32033;I32;;String current of strings 121;;0.000100;0.000000;A;4
494;3;32035;I32;;String current of strings 122;;0.000100;0.000000;A;4
495;3;32037;I32;;String current of strings 123;;0.000100;0.000000;A;4
496;3;32039;I32;;String current of strings 124;;0.000100;0.000000;A;4
497;3;32041;I32;;String current of strings 125;;0.000100;0.000000;A;4
498;3;32043;I32;;String current of strings 126;;0.000100;0.000000;A;4
499;3;32045;I32;;String current of strings 127;;0.000100;0.000000;A;4
500;3;32047;I32;;String current of strings 128;;0.000100;0.000000;A;4
501;3;32049;U32;;ID of current measurement unit where a communication error has
occurred.;;1.000000;0.000000;;4
502;3;32051;U32;;String monitoring unit warning code in the event of a string
error;;0.010000;0.000000;;4
503;3;32053;U32;;Alarm contact 1 status ;;1.000000;0.000000;;4
504;3;32055;U32;;Alarm contact 2 status ;;1.000000;0.000000;;4
505;3;32057;U32;;String status of the strings 1;;1.000000;0.000000;;4
506;3;32059;U32;;String status of the strings 2;;1.000000;0.000000;;4
507;3;32061;U32;;String status of the strings 3;;1.000000;0.000000;;4
508;3;32063;U32;;String status of the strings 4;;1.000000;0.000000;;4
509;3;32065;U32;;String status of the strings 5;;1.000000;0.000000;;4
510;3;32067;U32;;String status of the strings 6;;1.000000;0.000000;;4
511;3;32069;U32;;String status of the strings 7;;1.000000;0.000000;;4
512;3;32071;U32;;String status of the strings 8;;1.000000;0.000000;;4
513;3;32073;U32;;String status of the strings 9;;1.000000;0.000000;;4
514;3;32075;U32;;String status of the strings 10;;1.000000;0.000000;;4
515;3;32077;U32;;String status of the strings 11;;1.000000;0.000000;;4
```

```
516;3;32079;U32;;String status of the strings 12;;1.000000;0.000000;;4
517;3;32081;U32;;String status of the strings 13;;1.000000;0.000000;;4
518;3;32083;U32;;String status of the strings 14;;1.000000;0.000000;;4
519;3;32085;U32;;String status of the strings 15;;1.000000;0.000000;;4
520;3;32087;U32;;String status of the strings 16;;1.000000;0.000000;;4
521;3;32089;U32;;String status of the strings 17;;1.000000;0.000000;;4
522;3;32091;U32;;String status of the strings 18;;1.000000;0.000000;;4
523;3;32093;U32;;String status of the strings 19;;1.000000;0.000000;;4
524;3;32095;U32;;String status of the strings 20;;1.000000;0.000000;;4
525;3;32097;U32;;String status of the strings 21;;1.000000;0.000000;;4
526;3;32099;U32;;String status of the strings 22;;1.000000;0.000000;;4
527;3;32101;U32;;String status of the strings 23;;1.000000;0.000000;;4
528;3;32103;U32;;String status of the strings 24;;1.000000;0.000000;;4
529;3;32105;U32;;String status of the strings 25;;1.000000;0.000000;;4
530;3;32107;U32;;String status of the strings 26;;1.000000;0.000000;;4
531;3;32109;U32;;String status of the strings 27;;1.000000;0.000000;;4
532;3;32111;U32;;String status of the strings 28;;1.000000;0.000000;;4
533;3;32113;U32;;String status of the strings 29;;1.000000;0.000000;;4
534;3;32115;U32;;String status of the strings 30;;1.000000;0.000000;;4
535;3;32117;U32;;String status of the strings 31;;1.000000;0.000000;;4
536;3;32119;U32;;String status of the strings 32;;1.000000;0.000000;;4
537;3;32121;U32;;String status of the strings 33;;1.000000;0.000000;;4
538;3;32123;U32;;String status of the strings 34;;1.000000;0.000000;;4
539;3;32125;U32;;String status of the strings 35;;1.000000;0.000000;;4
540;3;32127;U32;;String status of the strings 36;;1.000000;0.000000;;4
541;3;32129;U32;;String status of the strings 37;;1.000000;0.000000;;4
542;3;32131;U32;;String status of the strings 38;;1.000000;0.000000;;4
543;3;32133;U32;;String status of the strings 39;;1.000000;0.000000;;4
544;3;32135;U32;;String status of the strings 40;;1.000000;0.000000;;4
545;3;32137;U32;;String status of the strings 41;;1.000000;0.000000;;4
546;3;32139;U32;;String status of the strings 42;;1.000000;0.000000;;4
547;3;32141;U32;;String status of the strings 43;;1.000000;0.000000;;4
548;3;32143;U32;;String status of the strings 44;;1.000000;0.000000;;4
549;3;32145;U32;;String status of the strings 45;;1.000000;0.000000;;4
550;3;32147;U32;;String status of the strings 46;;1.000000;0.000000;;4
551;3;32149;U32;;String status of the strings 47;;1.000000;0.000000;;4
552;3;32151;U32;;String status of the strings 48;;1.000000;0.000000;;4
553;3;32153;U32;;String status of the strings 49;;1.000000;0.000000;;4
554;3;32155;U32;;String status of the strings 50;;1.000000;0.000000;;4
555;3;32157;U32;;String status of the strings 51;;1.000000;0.000000;;4
556;3;32159;U32;;String status of the strings 52;;1.000000;0.000000;;4
```

```
557;3;32161;U32;;String status of the strings 53;;1.000000;0.000000;;4
558;3;32163;U32;;String status of the strings 54;;1.000000;0.000000;;4
559;3;32165;U32;;String status of the strings 55;;1.000000;0.000000;;4
560;3;32167;U32;;String status of the strings 56;;1.000000;0.000000;;4
561;3;32169;U32;;String status of the strings 57;;1.000000;0.000000;;4
562;3;32171;U32;;String status of the strings 58;;1.000000;0.000000;;4
563;3;32173;U32;;String status of the strings 59;;1.000000;0.000000;;4
564;3;32175;U32;;String status of the strings 60;;1.000000;0.000000;;4
565;3;32177;U32;;String status of the strings 61;;1.000000;0.000000;;4
566;3;32179;U32;;String status of the strings 62;;1.000000;0.000000;;4
567;3;32181;U32;;String status of the strings 63;;1.000000;0.000000;;4
568;3;32183;U32;;String status of the strings 64;;1.000000;0.000000;;4
569;3;34097;U32;;Operating time of interior fan_1;;1.000000;0.000000;s;4
570;3;34099;U32;;Operating time of interior fan 1-2;;1.000000;0.000000;s;4
571;3;34101;U32;;Operating time of interior fan_2;;1.000000;0.000000;s;4
572;3;34103;U32;;Operating time of interior fan 2-2;;1.000000;0.000000;s;4
573;3;34105;U32;;Operating time of heat sink fan-2;;1.000000;0.000000;s;4
574;3;34107;U32;;Operating time of heat sink fan-3;;1.000000;0.000000;s;4
575;3;34109;I32;;Heat sink temperature 1;;1.000000;0.000000;°C;4
576;3;34113;I32;;Interior temperature 1;;1.000000;0.000000;°C;4
577;3;34121;I32;;Transformer temperature 1;;1.000000;0.000000;°C;4
578;3;34125;I32;;External temperature 1 of supply air;;1.000000;0.000000;°C;4
579;3;34127;I32;;Highest measured external temperature 1;;1.000000;0.000000;°C;4
580;3;34609;I32;;Ambient temperature;;1.000000;0.000000;°C;4
581;3;34611;I32;;Highest measured ambient temperature;;1.000000;0.000000;°C;4
582;3;34613;U32;;Total irradiation on the sensor surface;;1.000000;0.000000;W/m²;4
583;3;34615;U32;;Wind speed;;0.100000;0.000000;m/s;4
584;3;34617;U32;;Humidity;;0.010000;0.000000;%;4
585;3;34619;U32;;Air pressure;;0.010000;0.000000;Pa;4
586;3;34621;I32;;PV module temperature;;1.000000;0.000000;°C;4
587;3;34623;U32;;Total irradiation on the external irradiation sensor/
pyranometer;;1.000000;0.000000;W/m²;4
588;3;34625;I32;;Ambient temperature_1;;1.000000;0.000000;°F;4
589;3;34627;I32;;Ambient temperature_2;;1.000000;0.000000;K;4
590;3;34629;I32;;PV module temperature_1;;1.000000;0.000000;°F;4
591;3;34631;I32;;PV module temperature_2;;1.000000;0.000000;K;4
592;3;34633;U32;;Wind speed_1;;0.100000;0.000000;km/h;4
593;3;34635;U32;;Wind speed_2;;0.100000;0.000000;mph;4
594;3;34637;I32;;Analog current input 1;;0.010000;0.000000;mA;4
595;3;34639;I32;;Analog current input 2;;0.010000;0.000000;mA;4
596;3;34641;I32;;Analog current input 3;;0.010000;0.000000;mA;4
597;3;34643;I32;;Analog current input 4;;0.010000;0.000000;mA;4
```

```
598;3;34645;I32;;Analog voltage input 1;;0.010000;0.000000;V;4
599;3;34647;I32;;Analog voltage input 2;;0.010000;0.000000;V;4
600;3;34649;I32;;Analog voltage input 3;;0.010000;0.000000;V;4
601;3;34651;I32;;Analog voltage input 4;;0.010000;0.000000;V;4
602;3;34653;U32;;Digital input group 1, coded as status:;;1.000000;0.000000;;4
603;3;34655;U32;;Digital input group 2, coded as status:;;1.000000;0.000000;;4
604;3;34657;U32;;Digital input status;;1.000000;0.000000;;4
605;3;34659;U32;;Operating status of battery management system;;1.000000;0.000000;;4
606;3;34661;U32;;Battery state of charge of the current
battery;;1.000000;0.000000;Wh;4
607;3;34663;U32;;Battery state of charge of the current battery-
2;;1.000000;0.000000;Wh;4
608;3;34665;U32;;Battery state of discharge of the current
battery;;1.000000;0.000000;Wh;4
609;3;34667;U32;;Battery state of discharge of the current battery-
2;;1.000000;0.000000;Wh;4
610;3;34669;U32;;Battery charging control via communication
available;;1.000000;0.000000;;4
611;3;35377;U32;;Number of events for user;;1.000000;0.000000;;4
612;3;35379;U32;;Number of events for user-2;;1.000000;0.000000;;4
613;3;35381;U32;;Number of events for installer ;;1.000000;0.000000;;4
614;3;35383;U32;;Number of events for installer-2;;1.000000;0.000000;;4
615;3;35385;U32;;Number of events for Service ;;1.000000;0.000000;;4
616;3;35387;U32;;Number of events for Service-2;;1.000000;0.000000;;4
617;3;40001;U32;;Reading and setting the UTC system time;;1.000000;0.000000;s;4
618;3;40003;U32;;Reading and setting the time zone;;1.000000;0.000000;;4
619;3;40005;U32;;Automatic daylight saving time conversion
active:;;1.000000;0.000000;;4
620;3;40007;U32;;Type of inverter control:;;1.000000;0.000000;;4
621;3;40009;U32;;Operating state:;;1.000000;0.000000;;4
622;3;40011;U32;;Acknowledgement:;;1.000000;0.000000;;4
623;3;40013;U32;;Set language:;;1.000000;0.000000;;4
624;3;40020;U32;;External measurement of the insulation
resistance:;;1.000000;0.000000;;4
625;3;40027;U32;;Reaction of the excitation type when changing the direction of power
flow:;;1.000000;0.000000;;4
626;3;40029;U32;;Operating status:;;1.000000;0.000000;;4
627;3;40031;U32;;Nominal capacity of the battery;;1.000000;0.000000;(Ah);4
628;3;40033;U32;;Maximum battery temperature;;1.000000;0.000000;°C;4
629;3;40035;U32;;Battery type:;;1.000000;0.000000;;4
630;3;40037;U32;;Nominal battery voltage;;1.000000;0.000000;V;4
631;3;40039;U32;;Time for boost charge of battery;;1.000000;0.000000;min;4
632;3;40041;U32;;Time for equalization charge of battery;;1.000000;0.000000;h;4
633;3;40043;U32;;Time for full charge of battery;;1.000000;0.000000;h;4
634;3;40045;U32;;Maximum battery charging current;;0.000100;0.000000;A;4
635;3;40047;U32;;Nominal generator current;;0.000100;0.000000;A;4
```

```
636;3;40049;U32;;Automatic generator start:;;1.000000;0.000000;;4
637;3;40051;U32;;Battery state of charge limit for generator shutdown;;1.000000;0.000000;%;4
638;3;40053;U32;;Battery state of charge limit for generator start;;1.000000;0.000000;%;4
639;3;40055;U32;;Manual generator control:;;1.000000;0.000000;;4
640;3;40057;U32;;Generator request via power on:;;1.000000;0.000000;;4
641;3;40059;U32;;Generator shutdown load limit;;1.000000;0.000000;W;4
642;3;40061;U32;;Generator start load limit;;1.000000;0.000000;W;4
643;3;40063;U32;;Firmware version of the central assembly  ;;1.000000;0.000000;;4
644;3;40065;U32;;Firmware version of the logic component ;;1.000000;0.000000;;4
645;3;40067;U32;;Serial number_2;;1.000000;0.000000;;4
646;3;40071;U32;;Grid-forming generator:;;1.000000;0.000000;;4
647;3;40073;U32;;Lower discharging limit for increased self-consumption;;1.000000;0.000000;%;4
648;3;40075;U32;;Increased self-consumption switched on:;;1.000000;0.000000;;4
649;3;40077;U32;;Initiate device restart:;;1.000000;0.000000;;4
650;3;40079;U32;;Battery final cut-off voltage;;0.010000;0.000000;V;4
651;3;40081;U32;;Maximum charge current of battery;;0.001000;0.000000;A;4
652;3;40083;U32;;Maximum discharge current of battery;;0.001000;0.000000;A;4
653;3;40085;U32;;Cell charging set voltage for boost charge;;0.010000;0.000000;V;4
654;3;40087;U32;;Cell charging set voltage for full charge;;0.010000;0.000000;V;4
655;3;40089;U32;;Cell charging set voltage for equalization charge;;0.010000;0.000000;V;4
656;3;40091;U32;;Cell charging set voltage for float charge;;0.010000;0.000000;V;4
657;3;40097;U32;;Voltage monitoring hysteresis, minimum threshold;;0.010000;0.000000;V;4
658;3;40099;U32;;Voltage monitoring hysteresis, maximum threshold;;0.010000;0.000000;V;4
659;3;40105;U32;;Frequency monitoring hysteresis, minimum threshold;;0.010000;0.000000;Hz;4
660;3;40107;U32;;Frequency monitoring hysteresis, maximum threshold;;0.010000;0.000000;Hz;4
661;3;40109;U32;;Set country standard:;;1.000000;0.000000;;4
662;3;40111;U32;;Voltage monitoring generator, minimum threshold (V);;0.010000;0.000000;V;4
663;3;40113;U32;;Voltage monitoring generator, maximum threshold (V);;0.010000;0.000000;V;4
664;3;40115;U32;;Voltage monitoring generator hysteresis, minimum threshold (V);;0.010000;0.000000;V;4
665;3;40117;U32;;Voltage monitoring generator hysteresis, maximum threshold (V);;0.010000;0.000000;V;4
666;3;40119;U32;;Frequency monitoring generator, minimum threshold (Hz);;0.010000;0.000000;Hz;4
667;3;40121;U32;;Frequency monitoring generator, maximum threshold (Hz);;0.010000;0.000000;Hz;4
668;3;40123;U32;;Frequency monitoring generator hysteresis, minimum threshold
(Hz);;0.010000;0.000000;Hz;4
669;3;40125;U32;;Frequency monitoring generator hysteresis, maximum threshold
(Hz);;0.010000;0.000000;Hz;4
```

```
670;3;40127;U32;;Voltage monitoring generator, maximum reverse power (W);;0.010000;0.000000;W;4
671;3;40129;U32;;Voltage monitoring generator, maximum reverse power tripping time (s);;1.000000;0.000000;s;4
672;3;40131;U32;;Grid connection point nominal current (A) ;;0.010000;0.000000;A;4
673;3;40137;U32;;Acknowledge generator errors:;;1.000000;0.000000;;4
674;3;40141;U32;;Maximum start attempts after error;;1.000000;0.000000;;4
675;3;40157;U32;;Automatic Speedwire configuration switched on:;;1.000000;0.000000;;4
676;3;40159_8;STRING;;Speedwire IP address, in the format XXX.XXX.XXX.XXX;;1.000000;0.000000;IP4;4
677;3;40167_8;STRING;;Speedwire subnet mask, in the format XXX.XXX.XXX.XXX;;1.000000;0.000000;IP4;4
678;3;40175_8;STRING;;Speedwire gateway address, in the format XXX.XXX.XXX.XXX;;1.000000;0.000000;IP4;4
679;3;40183;U32;;Line conductor assignment:;;1.000000;0.000000;;4
680;3;40185;U32;;Maximum device apparent power;;1.000000;0.000000;VA;4
681;3;40187;U32;;Nominal capacity of the battery_1;;1.000000;0.000000;Wh;4
682;3;40189;U32;;Maximum charge power of the battery;;1.000000;0.000000;W;4
683;3;40191;U32;;Maximum discharge power of the battery;;1.000000;0.000000;W;4
684;3;40193;U32;;Correction voltage, voltage increase protection;;0.000100;0.000000;V;4
685;3;40195;U32;;Set apparent power limit;;1.000000;0.000000;VA;4
686;3;40197;U32;;Current reactive power limit;;1.000000;0.000000;VAr;4
687;3;40454;U32;;Voltage monitoring, normalized lower maximum threshold;;0.000100;0.000000;%;4
688;3;40460;U32;;Voltage monitoring, normalized upper minimum threshold;;0.000100;0.000000;%;4
689;3;40480;U32;;Nominal current across all line conductor;;0.000100;0.000000;A;4
690;3;40486;U32;;Voltage at the zero point 1 of the reactive power characteristic curve;;0.000100;0.000000;%;4
691;3;40488;U32;;Voltage at the zero point 2 of the reactive power characteristic curve;;0.000100;0.000000;%;4
692;3;40497_8;STRING;;MAC address;;1.000000;0.000000;MAC;4
693;3;40513_8;STRING;;Speedwire DNS server address, in the format XXX.XXX.XXX.XXX;;1.000000;0.000000;IP4;4
694;3;40521;U32;;Grid request based on power switched on:;;1.000000;0.000000;;4
695;3;40523;U32;;Grid request connection power limit;;1.000000;0.000000;W;4
696;3;40525;U32;;Grid request disconnection power limit;;1.000000;0.000000;W;4
697;3;40527;U32;;Manual control of the utility grid:;;1.000000;0.000000;;4
698;3;40529;U32;;Grid request based on charge type:;;1.000000;0.000000;;4
699;3;40531;U32;;Type of AC subdistribution:;;1.000000;0.000000;;4
700;3;40533;U32;;Manual equalization charge:;;1.000000;0.000000;;4
701;3;40535;U32;;Generator request:;;1.000000;0.000000;;4
702;3;40537;U32;;Battery state of charge limit, generator start;;1.000000;0.000000;%;4
703;3;40539;U32;;Battery state of charge limit, generator shutdown;;1.000000;0.000000;%;4
704;3;40541;U32;;Start time additional time period, generator request  ;;1.000000;0.000000;;4
```

```
705;3;40543;U32;;End time additional time period, generator request ;;1.000000;0.000000;;4
706;3;40545;U32;;Battery state of charge limit, generator shutdown in additional time period;;1.000000;0.000000;%;4
707;3;40547;U32;;Battery state of charge limit, generator start in additional time period;;1.000000;0.000000;%;4
708;3;40549;U32;;Time-controlled generator operation:;;1.000000;0.000000;;4
709;3;40551;U32;;Start time for time-controlled generator operation;;1.000000;0.000000;;4
710;3;40553;U32;;Runtime for time-controlled generator operation;;1.000000;0.000000;s;4
711;3;40555;U32;;Repetition cycle of the time-controlled generator operation:;;1.000000;0.000000;;4
712;3;40557;U32;;Generator request in configured charge mode:;;1.000000;0.000000;;4
713;3;40559;U32;;Reaction to digital input of the generator request:;;1.000000;0.000000;;4
714;3;40561;U32;;Averaging time for load-dependent generator request based on power;;1.000000;0.000000;s;4
715;3;40563;U32;;Minimum run time of the generator;;1.000000;0.000000;s;4
716;3;40565;U32;;Minimum idle time of the generator;;1.000000;0.000000;s;4
717;3;40567;U32;;Cool-down time of the generator;;1.000000;0.000000;s;4
718;3;40569;U32;;Idle time after generator error;;1.000000;0.000000;s;4
719;3;40571;U32;;Warm-up time of the generator;;1.000000;0.000000;s;4
720;3;40573;U32;;Nominal generator frequency;;0.010000;0.000000;Hz;4
721;3;40575;U32;;Operating mode of the multifunction relay 1;;1.000000;0.000000;;4
722;3;40577;U32;;Operating mode of the multifunction relay 2;;1.000000;0.000000;;4
723;3;40579;U32;;Operating mode of the multifunction relay 3;;1.000000;0.000000;;4
724;3;40581;U32;;Operating mode of the multifunction relay 4;;1.000000;0.000000;;4
725;3;40583;U32;;Operating mode of the multifunction relay 5;;1.000000;0.000000;;4
726;3;40585;U32;;Operating mode of the multifunction relay 6;;1.000000;0.000000;;4
727;3;40587;U32;;Slave 1, operating mode of the multifunction relay 1;;1.000000;0.000000;;4
728;3;40589;U32;;Slave 1, operating mode of the multifunction relay 2;;1.000000;0.000000;;4
729;3;40591;U32;;Slave 1, operating mode of the multifunction relay 3;;1.000000;0.000000;;4
730;3;40593;U32;;Slave 1, operating mode of the multifunction relay 4;;1.000000;0.000000;;4
731;3;40595;U32;;Slave 1, operating mode of the multifunction relay 5;;1.000000;0.000000;;4
732;3;40597;U32;;Slave 1, operating mode of the multifunction relay 6;;1.000000;0.000000;;4
733;3;40599;U32;;Slave 2, operating mode of the multifunction relay 1;;1.000000;0.000000;;4
734;3;40601;U32;;Slave 2, operating mode of the multifunction relay 2;;1.000000;0.000000;;4
735;3;40603;U32;;Slave 2, operating mode of the multifunction relay 3;;1.000000;0.000000;;4
736;3;40605;U32;;Slave 2, operating mode of the multifunction relay 4;;1.000000;0.000000;;4
737;3;40607;U32;;Slave 2, operating mode of the multifunction relay 5;;1.000000;0.000000;;4
```

```
738;3;40609;U32;;Slave 2, operating mode of the multifunction relay
6;;1.000000;0.000000;;4

739;3;40611;U32;;Repetition cycle time relay control for timer
1:;;1.000000;0.000000;;4

740;3;40613;U32;;Repetition cycle time relay control for timer
2:;;1.000000;0.000000;;4

741;3;40615;U32;;Duration for which the multifunction relay remains activated for
timer 1;;1.000000;0.000000;s;4

742;3;40617;U32;;Duration for which the multifunction relay remains activated for
timer 2;;1.000000;0.000000;s;4

743;3;40619;U32;;Start date relay control for timer 1;;1.000000;0.000000;;4

744;3;40621;U32;;Start date relay control for timer 2;;1.000000;0.000000;;4

745;3;40623;U32;;Time-controlled inverter operation:;;1.000000;0.000000;;4

746;3;40625;U32;;Start date for time-controlled inverter
operation;;1.000000;0.000000;;4

747;3;40627;U32;;Runtime for time-controlled inverter
operation;;1.000000;0.000000;s;4

748;3;40629;U32;;Repetition cycle for time-controlled inverter
operation:;;1.000000;0.000000;;4

749;3;40631_8;STRING;;Device name  ;;1.000000;0.000000;;4

750;3;40647;U32;;Automatic updates switched on:;;1.000000;0.000000;;4

751;3;40649;U32;;Time of the automatic update ;;1.000000;0.000000;;4

752;3;40651;U32;;Connection location of the meters 1 on the measurement interfaces 1
to 3:;;1.000000;0.000000;;4

753;3;40653;U32;;Connection location of the meters 2 on the measurement interfaces 1
to 3:;;1.000000;0.000000;;4

754;3;40655;U32;;Connection location of the meters 3 on the measurement interfaces 1
to 3:;;1.000000;0.000000;;4

755;3;40657;U32;;serial numbers of the meters 1 on the measurement interfaces 1 to
3;;1.000000;0.000000;;4

756;3;40659;U32;;serial numbers of the meters 2 on the measurement interfaces 1 to
3;;1.000000;0.000000;;4

757;3;40661;U32;;serial numbers of the meters 3 on the measurement interfaces 1 to
3;;1.000000;0.000000;;4

758;3;40663;U32;;Grid Guard version;;1.000000;0.000000;;4

759;3;40665;U32;;Memory card status:;;1.000000;0.000000;;4

760;3;40667;U32;;Update version of the central assembly;;1.000000;0.000000;;4

761;3;40669;U32;;Start time for PV grid feed-in;;1.000000;0.000000;;4

762;3;40671;U32;;Stop time for PV grid feed-in ;;1.000000;0.000000;;4

763;3;40673;U32;;Blocking time until connection to external utility grid (s)
;;1.000000;0.000000;s;4

764;3;40675;U32;;Automatic frequency synchronization:;;1.000000;0.000000;-;4

765;3;40677;U32;;Maximum current from the utility grid (A);;0.000100;0.000000;A;4

766;3;40679;U32;;Reverse-feeding into the utility grid
permitted:;;1.000000;0.000000;;4

767;3;40681;U32;;Grid request based on battery state of charge switched
on:;;1.000000;0.000000;;4

768;3;40683;U32;;Battery state of charge limit for connection to the utility
grid;;1.000000;0.000000;%;4

769;3;40685;U32;;Battery state of charge limit for disconnection from the utility
grid;;1.000000;0.000000;%;4

770;3;40687;U32;;Start time additional time period for grid
request;;1.000000;0.000000;;4
```

```
771;3;40689;U32;;End time additional time period for grid request
;;1.000000;0.000000;;4

772;3;40691;U32;;Battery state of charge limit for connection to the utility grid in
the additional time period;;1.000000;0.000000;;4

773;3;40693;U32;;Battery state of charge limit for disconnection from the utility
grid in the additional time period;;1.000000;0.000000;;4

774;3;40695;U32;;Energy saving mode switched on:;;1.000000;0.000000;;4

775;3;40697;U32;;Maximum grid reverse power;;1.000000;0.000000;W;4

776;3;40699;U32;;Maximum grid reverse power tripping time;;1.000000;0.000000;s;4

777;3;40701;U32;;Time until switchover to energy saving mode;;1.000000;0.000000;s;4

778;3;40703;U32;;Maximum duration of the energy saving mode;;1.000000;0.000000;s;4

779;3;40705;U32;;Upper state of charge for reactivation of grid feed-
in;;1.000000;0.000000;%;4

780;3;40707;U32;;Lower state of charge for blocking grid feed-
in;;1.000000;0.000000;%;4

781;3;40709;U32;;Start time battery preservation mode level ;;1.000000;0.000000;;4

782;3;40711;U32;;End time battery preservation mode level  ;;1.000000;0.000000;;4

783;3;40713;U32;;Battery state of charge for preservation
mode;;1.000000;0.000000;%;4

784;3;40715;I32;;Battery connection limit after overtemperature
disconnection;;1.000000;0.000000;°C;4

785;3;40717;U32;;Cable resistance of the battery connection ;;1.000000;0.000000;;4

786;3;40719;U32;;Lower limit of the deep-discharge protection range for
disconnection;;1.000000;0.000000;%;4

787;3;40721;U32;;Minimum width of the deep-discharge protection
range;;1.000000;0.000000;%;4

788;3;40723;U32;;Minimum width of the backup power supply
range;;1.000000;0.000000;%;4

789;3;40725;U32;;Width of the range for the maintenance of the battery state of
charge;;1.000000;0.000000;%;4

790;3;40727;U32;;Minimum width of the self-consumption range;;1.000000;0.000000;%;4

791;3;40729;U32;;Highest yielding month for battery utilization
range:;;1.000000;0.000000;;4

792;3;40731;U32;;Seasonal operation active:;;1.000000;0.000000;;4

793;3;40733;U32;;Setpoint of the battery charging voltage with disabled battery
management;;0.010000;0.000000;V;4

794;3;40735;U32;;Full charge cycle time;;1.000000;0.000000;s;4

795;3;40737;U32;;Equalization charge cycle time;;1.000000;0.000000;s;4

796;3;40739;I32;;Battery temperature compensation;;0.000100;0.000000;(V/°C);4

797;3;40741;U32;;Automatic equalization charge:;;1.000000;0.000000;;4

798;3;40743;U32;;Type of additional DC sources:;;1.000000;0.000000;;4

799;3;40745;U32;;Type of generator current limitation:;;1.000000;0.000000;;4

800;3;40747;U32;;Sensitivity of the generator fault
recognition:;;1.000000;0.000000;;4

801;3;40749;U32;;Digital input status_1;;1.000000;0.000000;;4

802;3;40751;U32;;Inverter nominal voltage (V);;1.000000;0.000000;V;4

803;3;40753;U32;;Inverter nominal frequency Hz  ;;1.000000;0.000000;Hz;4

804;3;40755;U32;;Maximum AC battery charging current (A)  ;;0.000100;0.000000;A;4

805;3;40757;U32;;Battery state of charge threshold for load shedding 1 start
(%);;1.000000;0.000000;%;4
```

806;3;40759;U32;;Battery state of charge threshold for load shedding 1 stop (%);;1.000000;0.000000;%;4

807;3;40761;U32;;Start time additional time period load shedding 1;;1.000000;0.000000;;4

808;3;40763;U32;;Time load shedding 1;;1.000000;0.000000;;4

809;3;40765;U32;;Battery state of charge limit for load shedding 1 start in additional time period (%);;1.000000;0.000000;%;4

810;3;40767;U32;;Battery state of charge limit for load shedding 1 stop in additional time period (%);;1.000000;0.000000;%;4

811;3;40769;U32;;Battery state of charge threshold for load shedding 2 start (%);;1.000000;0.000000;%;4

812;3;40771;U32;;Battery state of charge threshold for load shedding 2 stop (%);;1.000000;0.000000;%;4

813;3;40773;U32;;Start time additional time period load shedding 2 ;;1.000000;0.000000;;4

814;3;40775;U32;;Time load shedding 2 ;;1.000000;0.000000;;4

815;3;40777;U32;;Battery state of charge limit for load shedding 2 start in additional time period (%);;1.000000;0.000000;%;4

816;3;40779;U32;;Battery state of charge limit for load shedding 2 stop in additional time period (%);;1.000000;0.000000;%;4

817;3;40781;I32;;Temperature limit for multifunction relay with battery room fan;;1.000000;0.000000;°C;4

818;3;40783;U32;;Serial number slave 1 (line conductor L2);;1.000000;0.000000;;4

819;3;40785;U32;;Serial number slave 2 (line conductor L3) ;;1.000000;0.000000;;4

820;3;40787;U32;;Behavior of the cluster in the event of a device fault:;;1.000000;0.000000;;4

821;3;40789;U32;;Communication version;;1.000000;0.000000;;4

822;3;40791;U32;;Time-out for communication error message (s);;1.000000;0.000000;s;4

823;3;40803;U32;;Determine state of health:;;1.000000;0.000000;;4

824;3;40805;U32;;Energy saving mode:;;1.000000;0.000000;;4

825;3;40807;U32;;Hardware version of the logic component ;;1.000000;0.000000;;4

826;3;40809;U32;;Revision status of the logic component ;;1.000000;0.000000;;4

827;3;40811;U32;;Update version of the logic component ;;1.000000;0.000000;;4

828;3;40813;U32;;Serial number of the logic component;;1.000000;0.000000;;4

829;3;40815;U32;;SUSy ID of the logic component ;;1.000000;0.000000;;4

830;3;40819;U32;;Firmware version of the protocol converter ;;1.000000;0.000000;;4

831;3;40821;U32;;Hardware version of the protocol converter ;;1.000000;0.000000;;4

832;3;40823;U32;;Revision status of the protocol converter ;;1.000000;0.000000;;4

833;3;40825;U32;;Update version of the protocol converter ;;1.000000;0.000000;;4

834;3;40827;U32;;Serial number of the protocol converter ;;1.000000;0.000000;;4

835;3;40829;U32;;SUSy ID of the protocol converter;;1.000000;0.000000;;4

836;3;40833;I32;;Reactive power setpoint;;1.000000;0.000000;Var;4

837;3;40835;I32;;Input monitoring value ;;1.000000;0.000000;;4

838;3;40837;I32;;Estimated fuel consumption since the last reset ;;0.100000;0.000000;m³;4

839;3;40839;I32;;Estimated current fuel consumption;;0.100000;0.000000;l/h;4

840;3;40841;I32;;Current generator power;;1.000000;0.000000;W;4

841;3;40843;I32;;Current available generator power;;1.000000;0.000000;VA;4

```
842;3;40845;I32;;Current generator reactive power ;;1.000000;0.000000;VAr;4

843;3;40847;I32;;Minimum generator power to be made available;;1.000000;0.000000;W;4

844;3;40849;I32;;Current utility grid export active power;;1.000000;0.000000;W;4

845;3;40851;I32;;Current utility grid export reactive power;;1.000000;0.000000;VAr;4

846;3;40853;U32;;Reset measurement values:;;1.000000;0.000000; -;4

847;3;40915;U32;;Currently set active power limit;;1.000000;0.000000;W;4

848;3;41001;I32;;Maximum achievable reactive power in quadrant
1;;1.000000;0.000000;VAr;4

849;3;41007;I32;;Maximum achievable reactive power in quadrant
4;;1.000000;0.000000;VAr;4

850;3;41009;I32;;Minimum achievable cos ? in quadrant 1  ;;0.000100;0.000000;-;4

851;3;41015;I32;;Minimum achievable cos ? in quadrant 4;;0.000100;0.000000;-;4

852;3;41131;U32;;Minimum voltage Input 1;;0.010000;0.000000;V;4

853;3;41133;U32;;Minimum voltage Input 2;;0.010000;0.000000;V;4

854;3;41135;U32;;Minimum voltage Input 3;;0.010000;0.000000;V;4

855;3;41155;U32;;Start delay Input 1;;1.000000;0.000000;s;4

856;3;41157;U32;;Start delay Input 2;;1.000000;0.000000;s;4

857;3;41159;U32;;Start delay Input 3;;1.000000;0.000000;s;4

858;3;41171;U32;;Set total yield;;1.000000;0.000000;kWh;4

859;3;41173;U32;;Set total operating time at the grid-connection
point;;1.000000;0.000000;h;4

860;3;41187;U32;;Source of the reference measurement for the reactive/active power
control mode;;1.000000;0.000000;-;4

861;3;41199;U32;;Set active power limit at the grid-connection point, in % of the
system’s nominal power;;1.000000;0.000000;%;4

862;3;41203;U32;;Nominal PV system power;;1.000000;0.000000;W;4

863;3;41205;U32;;Hardware version of battery management system ;;1.000000;0.000000;-
;4

864;3;41217;U32;;Set active power limit at the grid-connection
point;;1.000000;0.000000;W;4

865;3;41219;U32;;Reactive power for absent control operating
mode;;1.000000;0.000000;-;4

866;3;41221;U32;;Timeout for absent control operating mode;;1.000000;0.000000;s;4

867;3;41223;I32;;Fallback reactive power Q, in % of WMax for absent control
operating mode;;0.010000;0.000000;s;4

868;3;41225;U32;;Reactive power for absent cos ? setpoint  ;;1.000000;0.000000;-;4

869;3;41227;U32;;Timeout for absent cos ? setpoint ;;1.000000;0.000000;-;4

870;3;41229;I32;;Fallback cos ? for absent cos ? setpoint  ;;0.000010;0.000000;-;4

871;3;43090;U32;;SMA Grid Guard code:;;1.000000;0.000000;-;4
```