webdyn
flexitron group

MTX-IoT-S

4G IoT modem with 8x digital I/O, 2x ADC, ULP and battery

MTX-IoT-S is an innovative and powerful all-in-one solution for the IoT sector. It features a very effective ULP (Ultra Low Power) system that allows the device to work with primary batteries for years. This feature, together with its set of interfaces (RS232, RS485, USB, DI/O, ADC...) and the embedded MTX-Tunnel firmware, provides the MTX-IoT-S with a router-like functionality, and makes this modem ideal for most IoT applications, with no need for further hardware, shortening the time-to-market, and providing a cost-effective solution.

Main Features

- 4G/3G/2G communications
- USB
- RS232 RS485
- 8x digital I/O
- 2x ADC
- 4x DAC (optional)
- Latch relay
- Battery
- Ultra Low Power
- GPS (optional)
- 4G/3G/2G serial gateway
- GPIO management
- Relays management
- DynDNS No-IP
- MQTT/s
- Modbus & datalogger

HARDWARE SOFWARE

Strengths & Benefits

- Ultra Low Power (ULP) system that allows the device to work with primary batteries for years.
- With a complete set of interfaces.
- 8x digital I/O and 6x analog I/O.
- Embedded MTX-Tunnel firmware.

Applications

- A modem ideal for most IoT applications.
- All-in-one solution for the IoT sector.

contact@webdyn.com | webdyn.com
V1.0 subject to changes | Webdyn © by Flexitron Group

Specifications

MTX-IoT-S 4G
EUROPE: Penta-Band LTE: Bands 1, 3, 8, 20, 28 (700, 800,900, 1800, 2100 MHz); Dual-Band UMTS/HSPA+: Bands 8, 1 (900, 2100 MHz); Dual-Band GSM: 900 and 1800 MHz **AUSTRALIA:** Quad-Band LTE: Bands 3, 5, 8, 28 (1800, 850,900, 700 MHz); Tri-Band UMTS: Bands 1, 5, 8 (WCDMA/FDD 2100, 850, 900 MHz)
LTE Cat. 1 DL: max. 10.2 Mbps, UL: max. 5.2 Mbps
HSPA+ Cat.8 data rates DL: max. 7.2 Mbps, UL: max. 5.76 Mbps
GPRS Class 12 DL: max. 85.6 kbps, UL: max 85.6 kbps
SMS text and PDU mode support

Interfaces

- 4G/3G/2G connectivity
- RS232
- RS485
- 8x GPIOs (convertible to pulse input counter)
- 2x ADC (0-10V and 4-20mA)
- 4x DAC (0-10V and 20mA output max.) optional
- GPS (optional)
- Tamper input
- Latch relay (also available without relay)
- RF expansion 433/686/913MHz (optional)
- Real Time Clock with alarm functionality
- Accelerometer (optional)

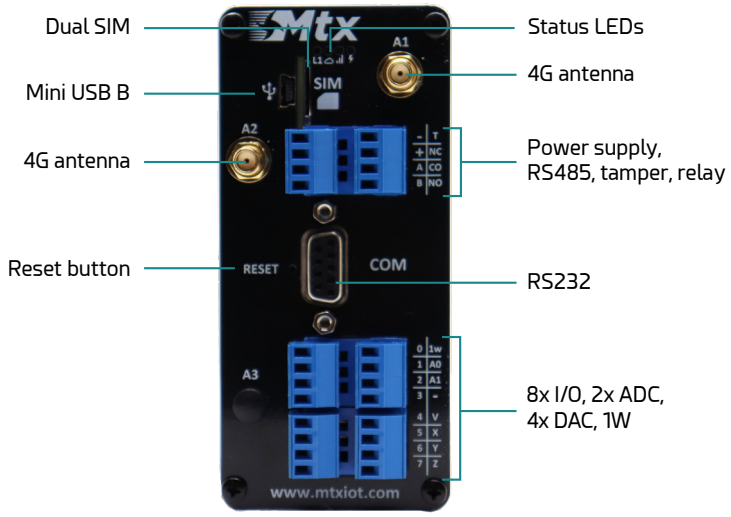

Connectors

- 2x SMA F: 4G
- 1x SMA F: GPS (optional)
- Mini USB B
- 1x DB9: RS232
- 4x2 terminal block: power supply, RS485, tamper, relay
- 8x2 terminal block: 8x I/O, 2x ADC, 4x DAC, 1W
- Dual SIM: 2x external access microSIM

Characteristics

- Battery
- Ultra Low Power
- Status LEDs
- DC input: 7 to 30Vdc (36Vdc optional)
- Temperature range: -30 - 85ºC
- Dimensions: 113x52x78mm
- Weight: 190gr.
- Certifications: CE, FCC, PTCRB, RoHS, ISO9001

contact@webdyn.com | webdyn.com
V1.0 subject to changes | Webdyn © by Flexitron Group

Processor

- Flash: 4G 31MB
- RAM: 4G 18MB
- CPU: 4G ARM11

References

PRODUCTS

MTX-IoT-S [4-N-N]	**000199802407**
MTX-IoT-S [4-R4-N]	**000199801494**
MTX-IoT-S [4-N-GPS]	**000199802409**
MTX-IoT-S [4-N-WMbus]	**000199802417**
MTX-IoT-S [4-N-GPS] (AUS)	**000199802410**
MTX-IoT-S [4-N-N] (AUS)	**000199802408**

[X-N-Wireless modules]		
4: 4G/3G/2G	**N:** no options **R4:** 4 relays	**N:** no options **GPS:** GPS/Glonass (-165dBm) WMbus: Wireless M-Bus

MTX-Tunnel Software Features

CONNECTIVITY

- 4G/3G/2G serial gateways: TCP client, TCP server, UDP client/server, accept incoming CSD calls, up to 2 simultaneous tunnel
- IP connectivity mode: permanent 100% time, under request (SMS, missed call), change on a digital input, analog input out of level, serial data on RS232/RS485 port, scheduled date/hour/time

TCP SERVICES

- Web server, Telnet, SNMP, Tacacs+, NTP
- Datalogger: MQTT, MQTTs, HTTP, HTTPs, FTP
- Shows the status of digital and analog inputs
- Change digital output level and relays
- Execute AT commands remotely: Telnet, MQTT/MQTTS, SMS, HTTP

SECURITY

- Authorized phone numbers
- Firewall IP, SSL/TLS connections, encrypted config
- Secure OTAP (remote FW upgrade)
- Watchdog hardware

ALARMS AND CONTROL

- Send SMS/MQTT alarm when the level of digital or analog input change
- SMS can be sent to up 10 remote users
- Execute remote AT commands
- Change the status of digital outputs & relays
- Customizable SMS commands

SOLUTIONS FOR DYNAMIC IP

- IP session using a SMS or missed call
- DynDNS and NoIP
- Private DNS

METERING, MODBUS, SENSORS...

- 868 MHz remote monitoring sensors (Wavenis)
- Master for modbus RTU devices, Modbus TCP slave, Modbus TCP to RTU gateway
- Relays control
- Access to serial devices using 2G/3G/4G and GSM
- Astronomical clock

contact@webdyn.com | webdyn.com
V1.0 subject to changes | Webdyn © by Flexitron Group